EziCore BCE Series

SKOPE Upright Fridge
Hydrocarbon

SKOPE IDs: BCE600N:EB60BYN and BCE1200N:EB12BYN

Service Manual

MAN80377 Rev. 1.2 Jul. 2023

SKOPE Refrigeration

SKOPE EziCore BCE Series
Bottom Mount Fridge
Hydrocarbon
Service Manual

MAN80377
Rev. 1.2 Jul. 2023

SKOPE INDUSTRIES LIMITED
Head Office
PO Box 1091, Christchurch
New Zealand
A.B.N. 73 374 418 306
AU: 1800 121 535
NZ: 0800 947 5673
E-mail: skope@skope.com
Website: www.skope.com

Trademark Infringement

The SKOPE trademark on this product is infringed if the owner, for the time being, does any of the following:

- Applies the trade mark to the product after its state, condition, get-up or packaging has been altered in any manner
- Alters, removes (including part removal) or obliterates (including part obliteration) the trade mark on the product
- Applies any other trade mark to the product
- Adds to the product any written material that is likely to damage the reputation of the trade mark

Notice of the above contractual obligations passes to:

- Successors or assignees of the buyer
- Future owners of the product

Contents

1 Specifications

Models

This service manual is applicable to the EziCore BCE bottom mount fridges listed in the table below. Refer to the relevant product specification sheet (available on the SKOPE website: www.skope.com) for specifications.

Table 1: Model specifications

Series	Model	SKOPE ID
EziCore BCE Series	BCE600N	EB60BYN
	BCE1200N	EB12BYN

2 Installation

Installation Guidelines

When installing this cabinet, ensure you consider and meet the installation guidelines below.

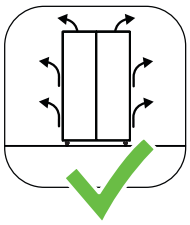

Ventilation
Ensure all ventilation requirements below are met.

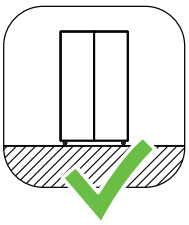

Surface
The installation surface must be capable of supporting the loaded cabinet.

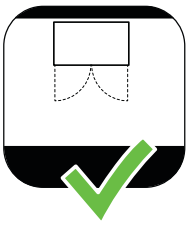

Door Opening
Allow adequate space for the door/s to open and close properly.

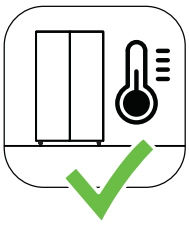

Climate Class
The fridge must be installed in an environment within its climate class.
The climate class is stated on the cabinet rating label inside the fridge.

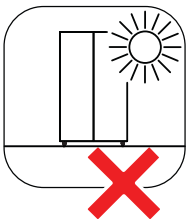

Sunlight
Do not install the fridge in direct sunlight.

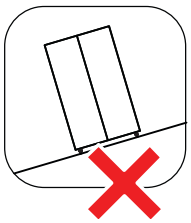

Uneven Surface
Do not install the fridge on an uneven surface.

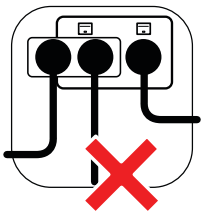

Power Supply
Do not overload the power supply.

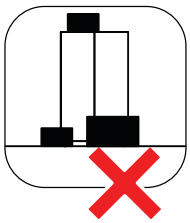

Blocking Ventilation
Do not store boxes or items in front or on top of the fridge.

Ventilation Requirements

This cabinet must have the following ventilation clearances at all times:

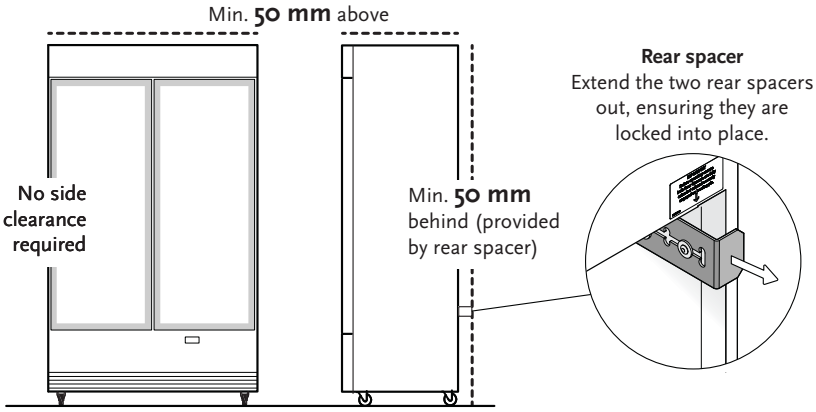

Sign Assembly

Follow the instructions below to remove the sign assembly, e.g. if you need to transport the cabinet through a low clearance doorway.

Procedure 1: To remove the sign assembly

1. Disconnect the cabinet from the mains power supply (see page 14).

2. Lift the sign panel so you can unplug the cabinet light connector(s) leading from the hinge:
   - BCE600N: 1 × connector on the right.
   - BCE1200N: 2 × connectors, one on each side.

3. Remove the polyethylene (PE) tape on the top of the cabinet.

4. Unplug the connector in the plastic box.

5. Swing the sign out from the cabinet, lift it off, and place it down carefully in your working area.

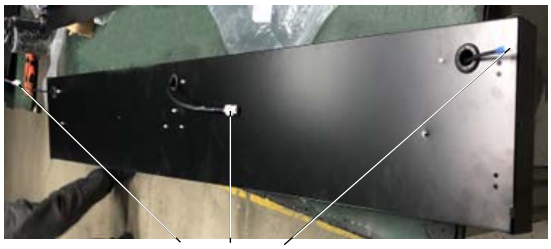

BCE1200N sign

6. Remove the back strip by lifting it up and off the side panels.

7. Loosen the screws holding the side panels to the top of the cabinet, then remove the side panels by sliding them backwards.

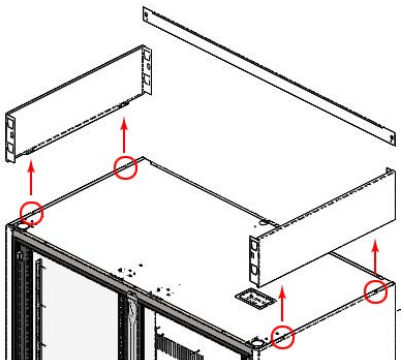

Procedure 2: To replace the sign assembly

1. Make sure the cabinet is disconnected from the mains power supply (see page 14).

2. Refit the sign's side panels:
   - Slide the panel forwards into position.
   - Tighten the screws attaching them to the top of the cabinet.

3. Reattach the back strip by sliding it into place.

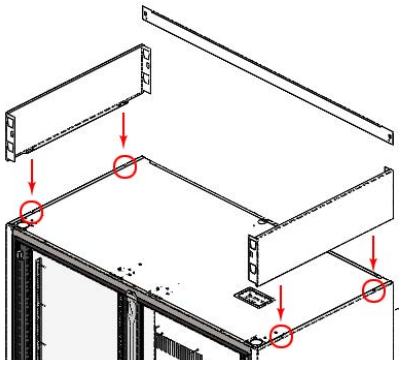

4. Reattach the connector on the sign's front panel to the connector in the plastic box.

5. Replace the polyethylene (PE) tape on the top of the cabinet.

6. Plug back in the cabinet light connector(s) leading from the hinge to the sign's front panel:
   - BCE600N: 1 × connector on the right.
   - BCE1200N: 2 × connectors, one on each side.

7. Carefully refit the sign's front panel by sliding the four hooks into the holes on the side panels.

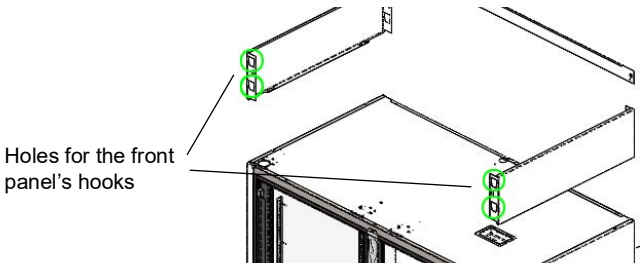

8. Connect the cabinet to the mains power supply and check for correct operation.

Door Handles

Fitting Door Handles

The cabinets are fitted with door handles when they are shipped or supplied. If you need to fit a handle, follow the procedure below.

Procedure 3: To fit a door handle

Before you start

1. Make sure all handle components are ready to assemble.
2. Ensure you have a screwdriver to fit the mounting hardware.
3. Note that the fixing screw is fastened through a counterbore hole, washer and into the nut bar in the door frame. The handle is fixed to mounting holes in the door frame.

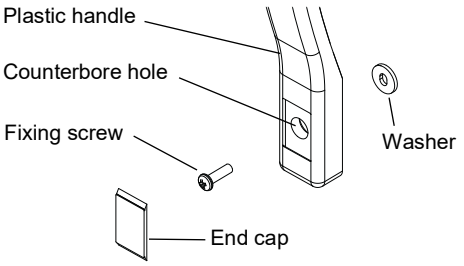

1. Place **BOTH** handle counterbore holes simultaneously onto the door frame mounting holes.

2. Fasten the fixing screws through the handle to lock the handle position.

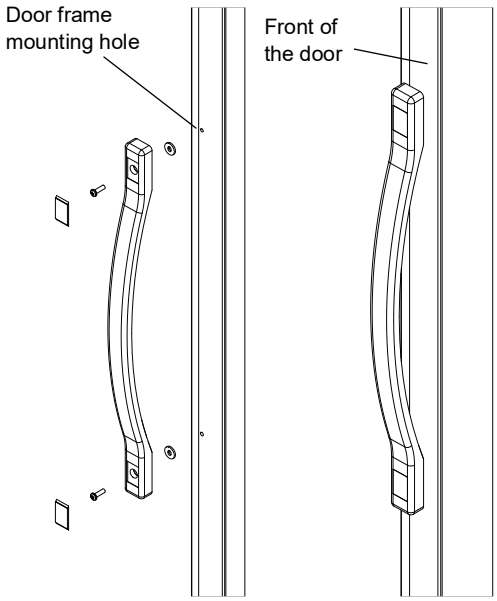

> **CAUTION**
> Ensure **BOTH** handles are securely fixed to the door frames before using the fridge.

3. Place the end caps over the screw heads to conceal the fasteners.
   The door handle assembly is now complete.

Removing Door Handles

The door handles can be removed for transporting and moving the cabinet through doorways, or for refitting.

Procedure 4: To remove a door handle

Before you start

Make sure you have a screwdriver and flat end tool, to remove the mounting hardware.

1. Use the flat end tool to gently pry off the handle end caps. This will expose fixing screw heads.
2. Unscrew handle fixing screws from both the top and bottom mounting points.
   The handle is now ready to be removed.

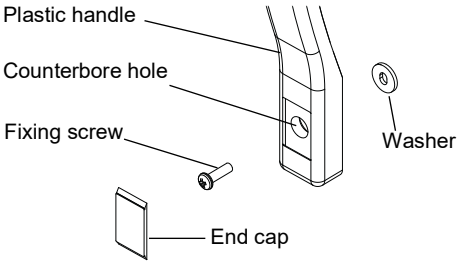

Shelves

The wire shelves each sit on shelf clips which slide up and down the shelf support strips inside the cabinet. The shelves may be positioned at different heights to suit various products. The retention clip which sits on the shelf clip doesn't need to be unlocked to move the shelf clip. Use the numbers on the shelf support strips to set the shelf clips at the same height.

Procedure 5: To move a shelf clip

1. Unclip the metal lock by pulling it forwards.
2. Move the clip:
   - To go upwards, slide the clip to the required position.
   - To go downwards, push the tab up and slide down to the required position.
3. When the clip is at the correct height, push the metal lock in to set the clip

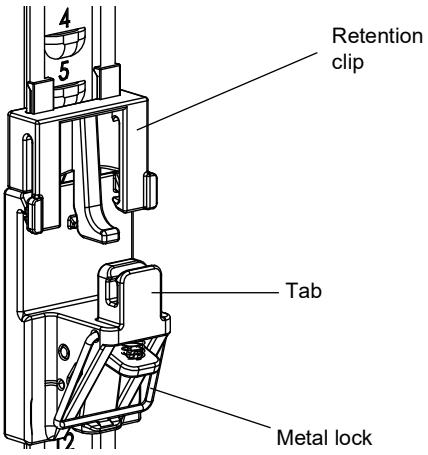

Procedure 6: To reposition a shelf

1. Unload and remove the shelf.
2. Move each shelf clip to the required position.
3. Sit the shelf on the shelf clips, and reload with product.

3 Wiring

BCE600N and BCE1200N

Wire colours

BK	Black
BN	Brown
RD	Red
OG	Orange
GN	Green
BU	Blue
GY	Grey
WH	White
GNYE	Green-Yellow
Based upon IEC 757 Standard	

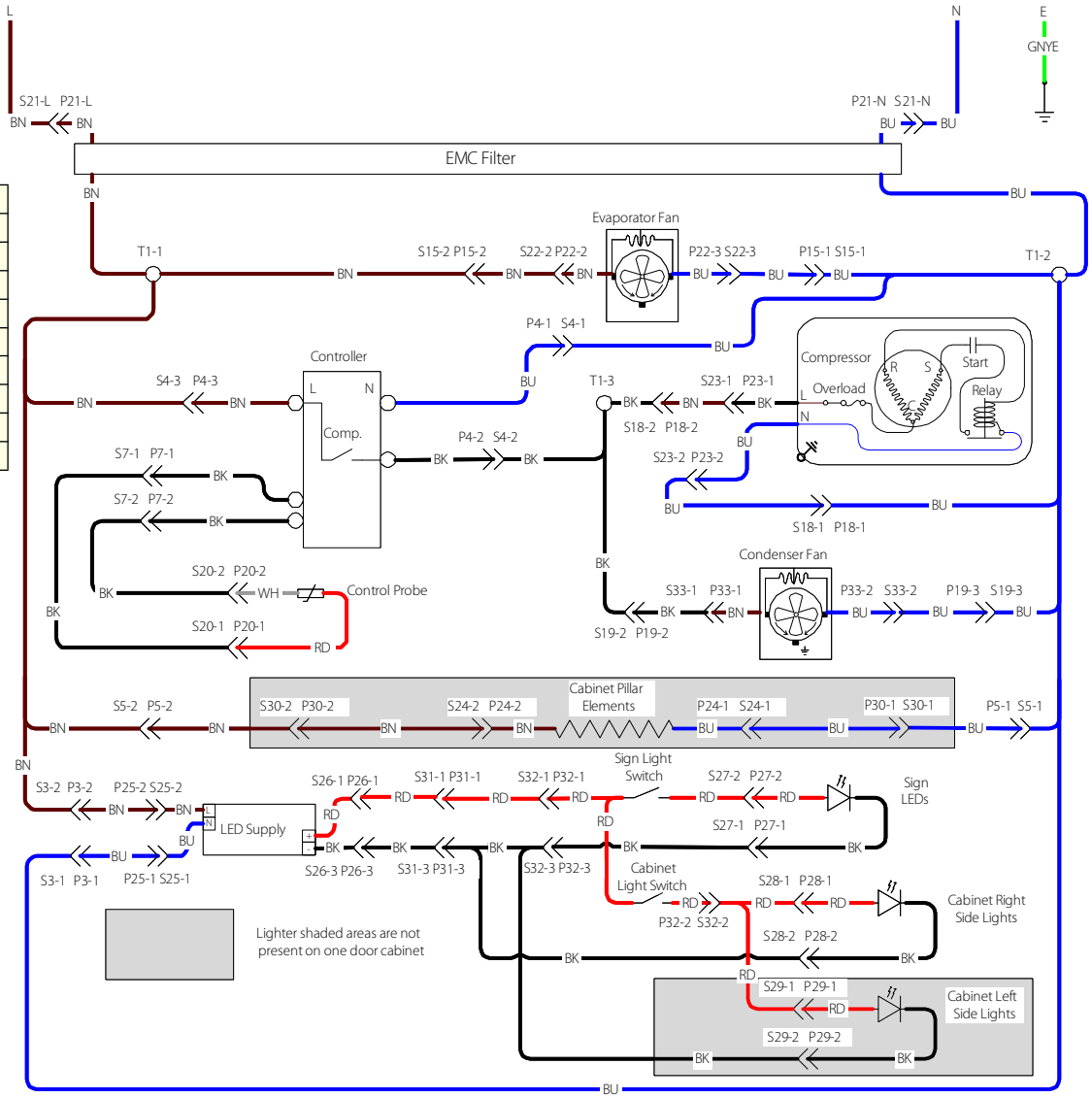

Legend

Item	Description	Item	Description
Cartridge electrics box connections		S18/P18	Compressor (4-way blue)
S1/P1	Unused	S19/P19	Condenser fan motor (4-way white)
S2/P2	Unused	S20/P20	Unit temperature probe (2-way red)
S3/P3	Cabinet lighting (4-way yellow)	**Other connections**	
S4/P4	Controller power (3-way white)	S21/P21	Mains IEC connection
S5/P5	Cabinet heating (3-way black)	S22/P22	Evaporator fan extension (4-way white)
S6/P6	Unused	S23/P23	Compressor extension (Molex)
S7/P7	Controller sensor (2-way black)	S24/P24	Pillar element connection (3-way black)
S8/P8	Unused	S25/P25	LED power supply input (Molex)
S9/P9	Unused	S26/P26	LED power supply output (4-way white)
S10/P10	Unused	S27/P27	Sign connection
S11/P11	Unused	S28/P28	Right lights connection
S12/P12	Unused	S29/P29	Left lights connection
S13/P13	Unused	S30/P30	Pillar element extension (3-way black)
S14/P14	Unused	S31/P31	Lighting extension (4-way white)
S15/P15	Evaporator fan motor (4-way red)	S32/P32	Lighting flex connection (4-way white)
S16/P16	Unused	S33/P33	Condenser fan extension (Molex)
S17/P17	Unused	T1	Cartridge joins

4 Electronic Controller

Introduction

The cabinet is fitted with a Chunchang C212 electronic controller which is visible through a cut-out in the kick panel. The electronic controller is pre-programmed and requires no initial setup or additional programming.

Temperature Setpoint

The temperature is set to stay between 0.5°C and 2.5°C. The setpoint can be adjusted to other temperature ranges for specialist applications if required (see below).

SKOPE does not recommend that the setpoint range be changed unless it is absolutely necessary, and then only by small increments at a time.

Procedure 7: To change the temperature setpoint range

1. Refer to the table below to determine the set number for the required temperature range.

Set	Temperature range
0	0.0°C to 1.5°C
1	0.5°C to 2.5°C
2	1.5°C to 3.5°C
3	2.5°C to 4.5°C
4	3.0°C to 5.0°C

Set	Temperature range
5	3.5°C to 5.5°C
6	4.0°C to 6.0°C
7	4.5°C to 6.5°C
8	5.0°C to 7.0°C

2. Press the **set** button for more than 3 seconds, until the controller displays the code “Po” (password).
3. Press the **set** button again to enter password setting mode. The controller will display “00”.
4. Press the **Power** (up) or **Defrost** (down) button to scroll to “55”.
5. Press the **set** button to confirm the password.
   - The parameter name “St” (setpoint) will be displayed.
   - If the password is incorrect the controller will return to its home screen.
6. Press the **set** button again. The controller will display the setpoint default value of 1.
7. Press the **Power** (up) or **Defrost** (down) button to increase or decrease the setpoint value.
8. Once the required setpoint is displayed, press the **set** button for more than 3 seconds. The controller will store the new setpoint and exit the setpoint parameter.

Messages and Alarms

The following table explains messages and alarms that the electronic controller displays.

Table 2: Chunchang C212 messages and alarms

Display	Description
	The cabinet's internal temperature. The temperature is what the sensor inside the fridge detects, and not necessarily the product temperature. However, they may be very close depending on how the controller is set to sense temperature. **Note**: The display does not have a decimal point.
	Compressor indicator. On when the compressor starts. Off when the compressor stops.
	Defrost indicator. On when the defrost is activated. Off when the defrost is over.
	Temperature sensor/control probe fault. This indicates a fault with the temperature sensor. Replace the control probe – see Procedure 20, "To replace the control probe", on page 23.

Parameters

Table 3: Chunchang C212 parameters

Parameter	Setting	Description	Min	Max	Unit	Default
St	1	Set temperature	R1	R2	°C	2
R1	0	Set temperature minimum	0	R2	°C	0
R2	8	Set temperature maximum	R1	8	°C	8
C1	-2	Temperature sensor calibration	-10	10	°C	-2
C2	0	Compressor power-on delay	0	60	Sec.	0
C3	5	Minimum downtime	0	60	Min.	5
A1	5	Compressor working time when sensor fails	1	60	Min.	5
A2	30	Compressor downtime in case of sensor failure	1	60	Min.	5
D1	4	Defrost cycle	0	90	Hour	4
D2	30	Defrost time	1	90	Min.	20
D3	2	Defrost display	0	2	–	2
DC	1	Display switching time	0	99	Min.	1

5 Replacement Procedures

Caution
Disconnect the cabinet from the mains power supply before attempting **any** maintenance.

Procedure 8: To disconnect the cabinet from the mains power supply

1. Switch the cabinet off at the mains power supply.
2. Unplug the power cord from the mains power supply.

Lighting

The cabinet is fitted with LED interior lights and LED sign lights. Ensure the light is replaced with the same light type. Fluorescent or LED tubes cannot be used in place of LED modular lights.

IMPORTANT
Replace the light with the same SKOPE OEM part.
DO NOT use alternative LED strip or tube lights, or fluorescent tubes.

Refer to Spare Parts for replacement light specifications:

- “Glass Door Assembly” on page 42 for the interior light.
- “Sign Assembly” on page 43 for the sign light.

The lighting is made up of three components which are replaceable:

- LED modular light
- LED driver
- Interior wiring loom

Power is supplied to the lights by the LED driver (located in the cartridge compartment).

Lighting components are all non-serviceable items. If a component is faulty, remove it and replace it with a SKOPE OEM new component.

Refer to Table 18, “Cabinet and cartridge troubleshooting,” on page 49 to see which component may be at fault, and follow the procedures over the next few pages for replacement instructions.

Ensure the cabinet is disconnected from the power supply before removing any parts.

Procedure 9: To replace an interior light assembly

1. Disconnect the cabinet from the mains power supply (see page 14).

2. Gently remove the side and top black plastic strips with a slotted screwdriver to expose the failed light assembly's black water-proof connector.

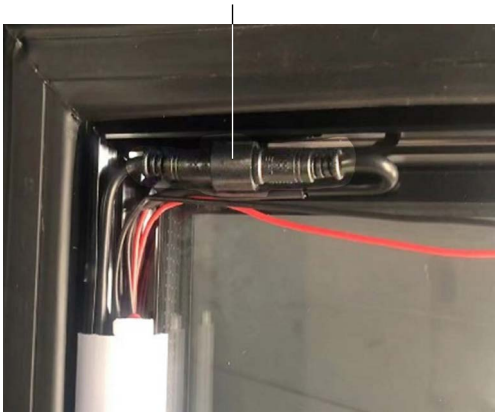

3. Unplug the connector and gently remove the failed light assembly with the slotted screwdriver.

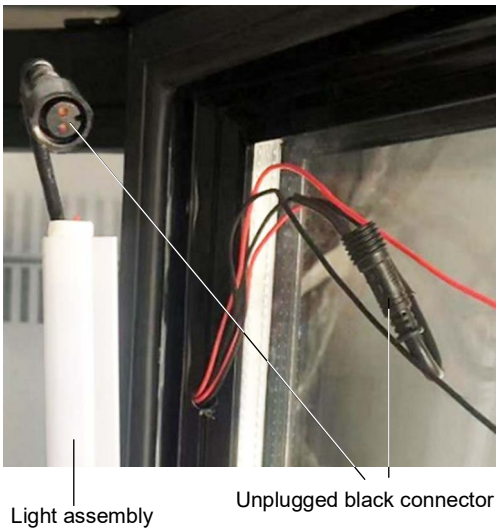

4. Fit the new light assembly and plug into the black connector.
5. Refit the side and top plastic strips.
6. Reconnect the cabinet to the mains power supply and check for correct operation.

Procedure 10: To replace the LED driver

1. Disconnect the cabinet from the mains power supply (see page 14).

2. Remove the kick panel from the front of the cabinet.

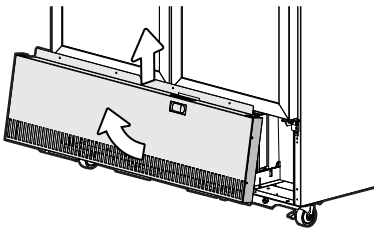

BCE600N only

3. Detach the refrigeration cartridge and carefully manoeuvre it to allow access to the cabinet electrics cover.
4. Unscrew the connector cover.

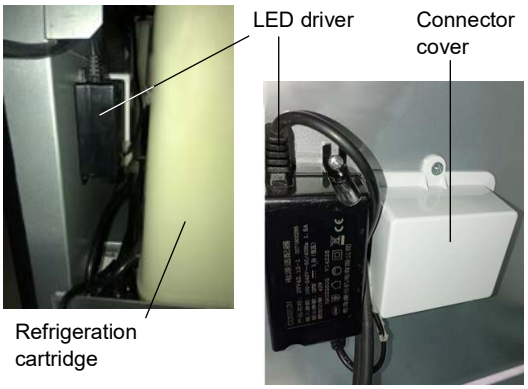

BCE600N and BCE1200N

5. Unplug the two LED driver connectors:
   - BCE600N: back left of the cabinet.
   - BCE1200N: front right of the cabinet.

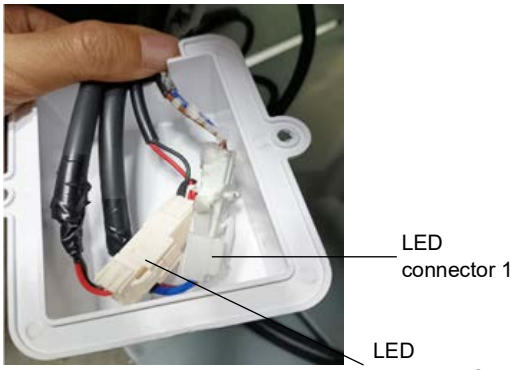

BCE600N

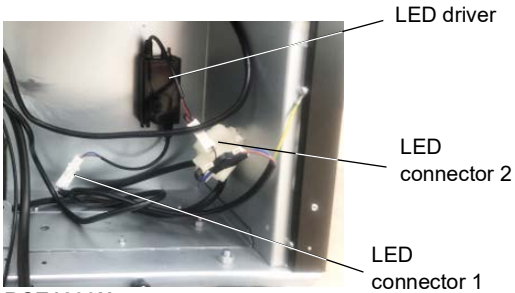

BCE1200N

6. Unscrew and remove the LED driver.
7. Replace the LED driver and reassemble the cabinet.
8. Reconnect to the mains power supply and check for correct operation.

Procedure 11: To replace the sign lighting loom and cabinet lighting loom

1. Disconnect the cabinet from the mains power supply (see page 14).
2. Remove the sign's front panel (see steps 2 to 5 in Procedure 1, "To remove the sign assembly," on page 7).
3. Remove the sign clips to release the light panel.

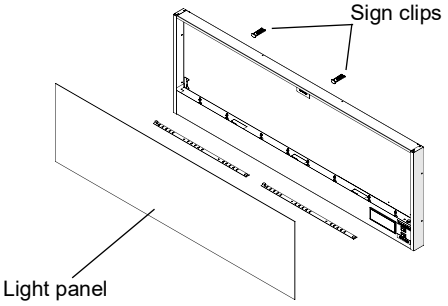

4. Unplug the relevant connectors.
   - Cabinet lighting loom: unplug the white 4-way connector in the sign panel.
   - Sign lighting loom: unplug the white 4-way connector, the black 2-way connector, and the switch connectors in the sign panel.

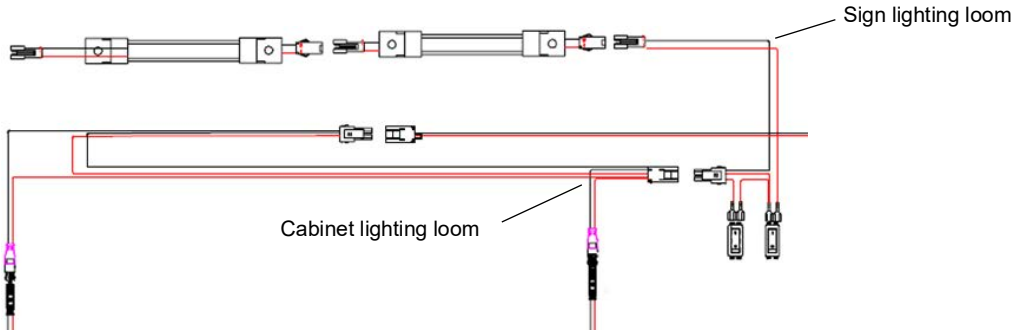

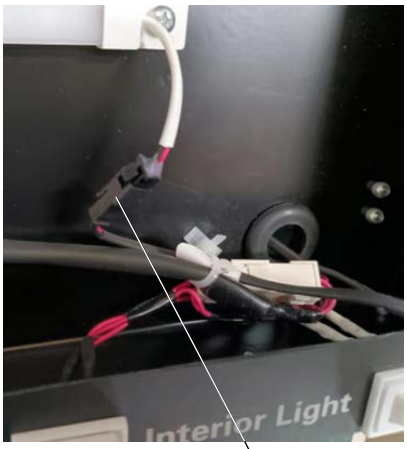

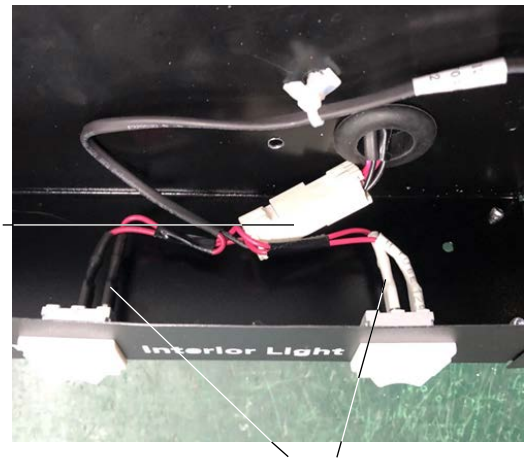

White 4-way connector

Black 2-way connector

Switch connectors

5. Cut the cable ties and remove the loom from the sign panel.
6. Fit the new loom and reassemble the cabinet. Ensure that:
   - all the plugs are clean, correctly fitted and plugged in.
   - the loom is reconnected to the door light connector.
   - the top connector is resealed with polyethylene (PE) tape.
7. Reconnect the cabinet to the mains power supply and check for correct operation.

Sign Light

The sign is lit by an LED modular light which can be replaced.

Procedure 12: To replace the sign light

1. Disconnect the cabinet from the mains power supply (see page 14).
2. Remove the sign (see steps 2 to 5 in Procedure 11 on page 17).
3. Remove the sign clips to release the light panel. Unplug the failed LED strip and fit the new LED strip.

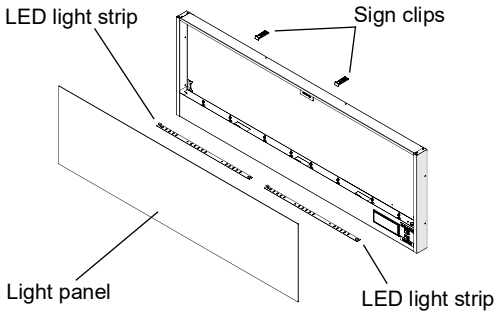

BCE1200N sign

4. Refit the sign's front panel and reconnect the:
   - cabinet light connector(s) leading from the hinge.
   - connector on the top of the cabinet.
5. Reseal the top connector with polyethylene (PE) tape.
6. Reconnect the cabinet to the mains power supply and check for correct operation.

Doors

Replacing the Gasket

The one-piece door gasket clips into the door frame and runs around the perimeter of the door. Remove the gasket by peeling it from the door frame, starting at a corner.

If the gasket is out of shape after refitting, use a hair dryer to heat and reshape it.

Removing and Refitting the Door

For ease of servicing, the doors can be removed from the cabinet.

Procedure 13: To remove the door

1. Disconnect the cabinet from the mains power supply (see page 14).
2. If present, remove the sign (see steps 2 to 5 in Procedure 11 on page 17) and kick panel.

Procedure 13: To remove the door (continued)

3. Remove the split pin from the capstan at the bottom hinge.

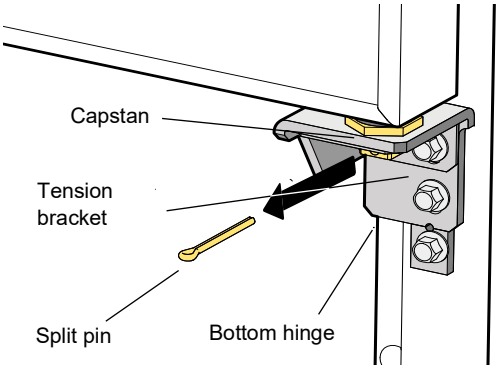

4. Undo the top bolt from the hinge, and carefully remove the tension bracket.
   Warning: Be careful because the capstan will spin as tension is relieved.

5. Unscrew the top hinge, and lift the door up and off the cabinet.

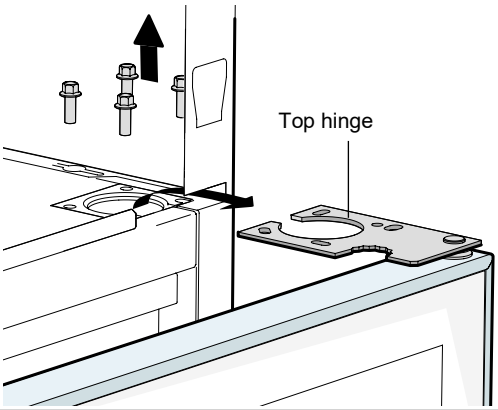

Procedure 14: To refit the door

1. Lift the door onto the bottom hinge using the door pin to help place it correctly.
2. Fit the top hinge spacer under the top hinge.
3. Fit the top hinge to the top of the door and cabinet, and partially fix it in place.
4. Align the door with the cabinet and tighten the fixing screws.
5. Apply tension to the door (see Procedure 16, “To adjust the door tension,” on page 20).
6. Fit the height adjustment block to the bottom screw hole. If necessary, adjust the height of the door (see Procedure 17, “To adjust the door height,” on page 20).
7. Replace the sign and kick panel.

Procedure 15: To replace the top hinge bracket

1. Follow the steps in Procedure 13 above to remove the top hinge bracket.
2. Remove the top hinge from the top of the door and fit the new one.
3. Follow Procedure 14 above to refit the door.

Adjusting Door Tension

The door has an internal torsion bar, pre-tensioned at the factory, that lets the door self-close. If necessary, the door tension can be further adjusted by rotating the capstan mounted in the bottom hinge bracket.

Procedure 16: To adjust the door tension

1. Remove the split pin from the capstan at the bottom hinge.
2. Remove the tension bracket from the bottom hinge.
3. Use a tool to apply tension to the door via the capstan. The top hinge has a cut out for tensioning (if a spare top hinge is available).
4. First, rotate the capstan against the door opening direction to remove any slack. Once resistance is felt, continue to rotate 180° to provide tension.
5. While holding door tension on the capstan, fit the tension bracket so that it supports the door tension on the capstan.
6. Fit the split pin through the hole in the capstan to lock the door in place.

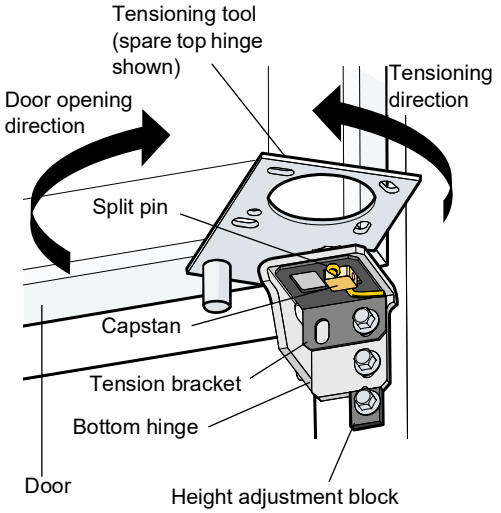

Outside door bottom hinge assembly (with tensioning tool)

7. Check door tension by holding the door open about 100 mm and letting it go. The door should close gently, with the gasket forming an airtight seal with the cabinet.

Adjusting Door Height

A height adjustment block is fitted below the bottom hinge. As standard, the notched edges on the bottom of the hinge and the top of the height adjustment block align to set the door to the correct level. If the door is not at the correct height when at the standard setting, follow the steps below to adjust the height.

Procedure 17: To adjust the door height

1. Disconnect the cabinet from the mains power supply (see page 14).
2. Unscrew and remove the kick panel.
3. Loosen the bottom hinge, and remove the height adjustment block.

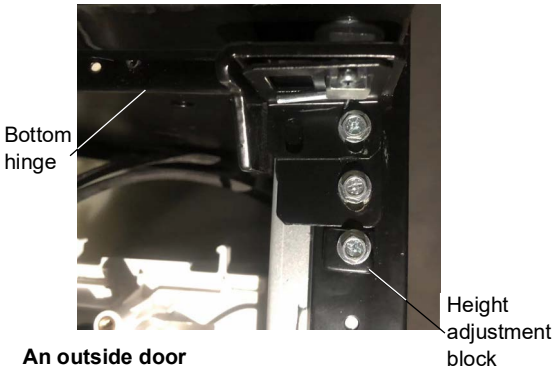

An outside door

4. Set the door to the correct height, turn the height adjustment block to the most appropriate angle, refit it, and tighten up the bottom hinge screws.

Electronic Controller

Controller Location

The electronic controller is located behind the kick panel and sits in a cut-out in the panel. It can be mounted by a snap-fit feature on the controller's sides.

Kick panel

Controller display

Procedure 18: To access the controller

1. Disconnect the cabinet from the power supply (see page 14).
2. Unscrew and remove the kick panel and detach the controller housing from the kick panel.

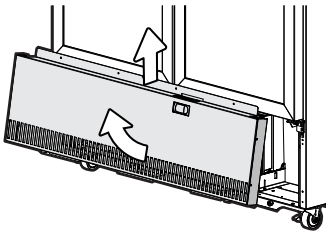

3. Unscrew and remove the controller housing cover to access the controller.

Kick panel

Controller housing

Closed cell foam

Controller Flexes

To connect the controller, plug the control probe flex and controller power flex into the correct sockets on the controller. To disconnect the controller, simply unplug the control probe flex and controller power flex.

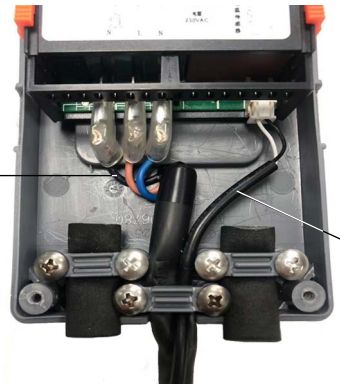

Replacing the Controller

Note: Replacement spare part electronic controllers are supplied with the default parameter set loaded.

Procedure 19: To replace the controller

1. Make sure that the replacement controller has the:
   - correct model name (C212SNBCR-25).
   - same programme version as the original controller.

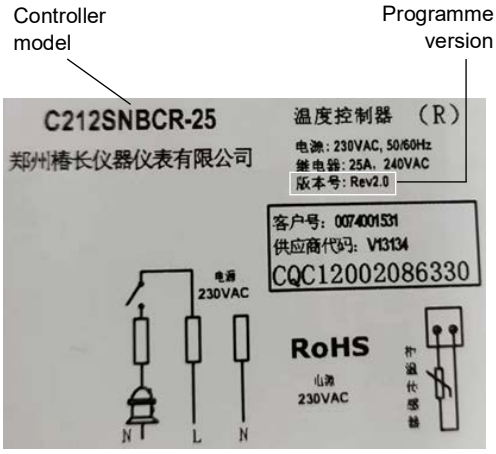

2. Disconnect the cabinet from the power supply (see page 14).
3. Access the electronic controller (see page 21).
4. Disconnect the controller from its flexes.
5. Remove the controller from its housing base by releasing the clip on each side of the controller.

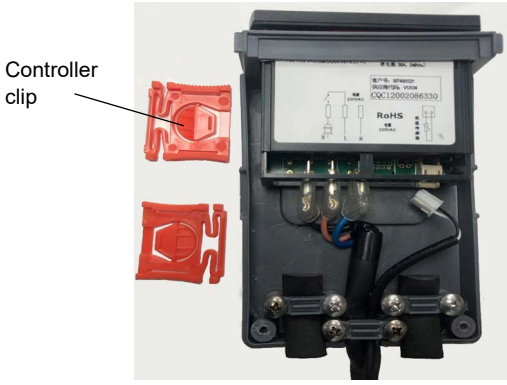

6. Fit the replacement controller, connect its flexes, and refit the clips and controller housing cover.

Procedure 19: To replace the controller (continued)

7. Refit the controller housing to the kick panel, and replace the kick panel on the cabinet.
8. Perform an electrical safety test as required, and reconnect to the power supply.
9. Check that the display is showing correctly on the controller without any alarms (see “Messages and Alarms” on page 13).

Control Probe

The control probe is cable-tied to a bracket on the evaporator fan motor.

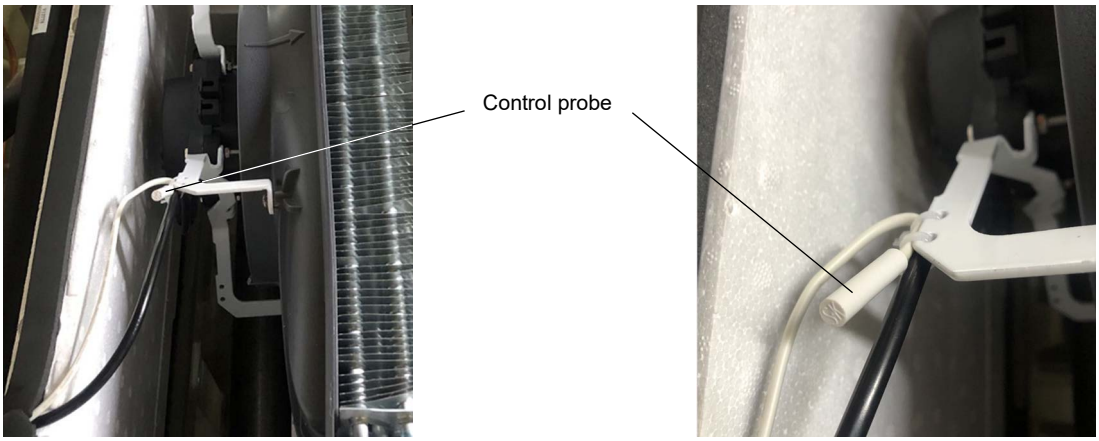

Procedure 20: To replace the control probe

Before you start

1. If a customer reports a “not cooling” fault, and it has been established that the cabinet is not cooling, follow the “On-site Work Procedure” on page 36.
2. Make sure you take note of the control probe’s original path.

1. Disconnect the cabinet from the power supply (see page 14).
2. Remove the evaporator fan assembly (see page 32).
3. Trace the probe cable back to the cartridge electrics box and unplug it (see page 28).
4. Following the same path as the original probe, fit the new probe with cable ties as necessary. Ensure the probe cable is securely plugged into the rear of the cartridge electrics box, and that it is cable-tied to the evaporator fan shroud bracket, with the probe bent away from the fan bracket at a 45° angle.
5. Reassemble the cartridge and test and tag as per standard procedure.
6. Reconnect to the power supply and check for correct operation.

Refrigeration System

Before Servicing

Overview

Ensure you have read and understood this manual before starting any servicing.

Important

- SKOPE hydrocarbon refrigeration systems must only be serviced by appropriately skilled and qualified refrigeration mechanics.
- Servicing a sealed refrigeration system must occur at a hydrocarbon workshop or service area with dedicated hydrocarbon equipment and personal protective equipment (PPE).
- All local hydrocarbon storage and handling regulations and procedures must be followed at all times.

Ensure all electronic controller alarms diagnostics and refrigeration system diagnostics are performed to confirm a refrigeration system fault is present.

Check all components including the electronic controller and electrical systems.

Ensure your work area is well ventilated.

IMPORTANT
Use only dedicated hydrocarbon SKOPE OEM spare parts.
DO NOT use alternative parts.
For safety compliance, use only SKOPE-supplied components specified for the appliance.

Safety hazards

The main hydrocarbon safety hazards are:

- Flammability
- Venting of hydrocarbon and compressor oil
- Asphyxiation

Refrigerant identification

Correctly identifying the refrigerant is critical to maintain safety and the correct functioning of the cabinet.

- The cabinet rating label (located in the upper inside of the cabinet) states the refrigerant type.
- Warning labels are fitted to hydrocarbon refrigeration cabinets to indicate the use of hydrocarbon refrigerant.

Personal protective equipment (PPE)

Correctly wear or use all PPE required by local regulations and procedures during servicing.

Service equipment

Only use dedicated hydrocarbon service equipment which is hydrocarbon-compliant. Electrical equipment that could be exposed to the refrigerant must be intrinsically safe.

In addition to standard tools for accessing and removing parts, specialist tools are required for completing the refrigeration system service tasks in this manual:

- Intrinsically safe refrigeration vacuum pump, rated by the manufacturer as suitable for use with hydrocarbon refrigerant
- Dedicated hydrocarbon gauge set
- Flammable gas detector to warn if flammable refrigerant is present
- Charging scales, rated by the manufacturer as suitable for use with hydrocarbon refrigerant, accurate to 1 gram

Leak detector

A leak detector is used to track and locate the source of hydrocarbon gas leaks. It is:

- recommended for servicing hydrocarbon units on-site.
- required for servicing hydrocarbon units off-site.

Service vehicle

- Must be suitable for transporting flammable gas.
- Vehicle cargo area:
  - Must be well ventilated to outside the vehicle only.
  - Must have no ignition sources, nor any areas where the gas may pool.
- Must be able to transport swap units.
- Should carry minimum SKOPE hydrocarbon service parts.

On-site Work

The service technician must have required knowledge, skills, qualifications, and tools before beginning any on-site work on the refrigeration sealed system.

Minimum knowledge and skills

- Qualifications and certifications required by local/state regulatory bodies to service hydrocarbon refrigeration systems
- Safe working practices, including a safe working environment at all times

Minimum tools and equipment

- Safety signage and/or barrier – suitable to create a safe work zone 1.5 m around the cabinet
- Hydrocarbon gas detector
- Dedicated hydrocarbon gauge set
- Bullet valves/line piercing valves suitable for a 6 mm tube

Off-site Work

Hydrocarbon workshop

The following tools and equipment are required in the hydrocarbon workshop:

- Dedicated area for hazardous work – suitable for servicing and releasing flammable hydrocarbon refrigerant
- Hydrocarbon leak detector
- Refrigeration gauge set – suitable for flammable hydrocarbon refrigerant
- Dry nitrogen – suitable for purging and high pressure testing
- Intrinsically safe refrigeration vacuum pump, rated by the manufacturer as suitable for use with hydrocarbon refrigerant
- Charging scales, rated by the manufacturer as suitable for use with hydrocarbon refrigerant, accurate to 1 gram
- Hydrocarbon refrigerant supply cylinder

Refrigeration Cartridge

Refrigeration Cartridge Assembly

The refrigeration cartridge is a bottom-mounted, electronically controlled removable cartridge.

For safety and compliance, only repair the cabinet with SKOPE-supplied parts made specifically for this appliance. Other parts may appear to be suitable, but may not be approved or safe for use in an appliance with hydrocarbon refrigerant.

The cartridge must only be used on a SKOPE hydrocarbon-compliant cabinet. Refer to the cabinet rating label to determine if the cabinet is suitable for use with a hydrocarbon cartridge. The rating label **must** state refrigerant as R290. If the label states a different refrigerant, or does **not** state a refrigerant, it is NOT suitable for a hydrocarbon cartridge.

WARNING
The hydrocarbon cartridge must only be used on an hydrocarbon-compliant cabinet.

For servicing or transportation, the refrigeration cartridge unplugs and can be removed from the cabinet. Some minor servicing can be performed without removing the cartridge.

The model and serial number are both printed on the cartridge rating/serial number label attached to the top of the side of the cover.

LSUBHCNI

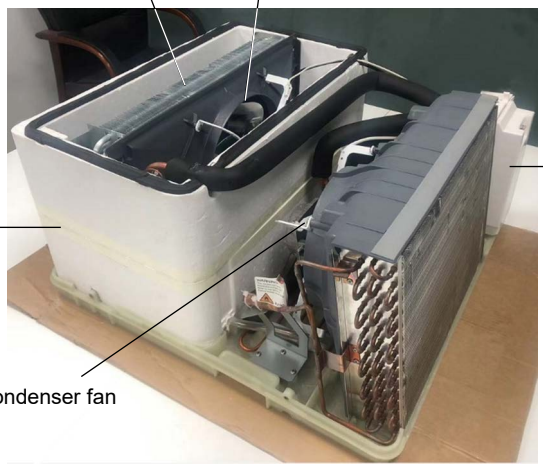

Verify the model and basic requirements before servicing.

Table 4: Cartridge specifications

Cartridge model	UBHCNI-0061
Compressor	Donper L96CU1
Compressor capacity	670 watts (EN12900 MBP)
Refrigerant/Charge	R290/84 g

Not Cooling Fault

If a customer reports a “not cooling” fault, and it has been established that the cabinet is not cooling, follow the procedure on page 36 when making the service visit.

Diagnostics

The following diagnostic test (Procedure 21) is useful to diagnose if the refrigeration cartridge is short of gas. Perform the test before opening the refrigeration system.

It is helpful to have a correctly operating cartridge running beside the cartridge being serviced to compare behaviour.

Note: This diagnostic procedure is indicative only.

Procedure 21: To determine if there is a sealed system fault

Before you start

1. If a customer reports a “not cooling” fault, and it has been established that the cabinet is not cooling, follow the “On-site Work Procedure” on page 36.
2. Ensure you are in a suitable workshop (see page 25).

1. Disconnect the cabinet from the power supply (see page 14).
2. Remove the refrigeration cartridge (see page 27).
3. Remove the cartridge cover (see page 29).
4. Place cartridge on bench and connect a service probe to the red plug on the cartridge.
5. Connect the refrigeration cartridge to the power supply and allow to run for approximately 10 minutes, until the evaporator temperature stabilises.
6. Refer to the table below to determine if the system charge is correct.
   A system with the correct refrigerant charge will frost back towards the compressor. The point where the frost stops is affected by the ambient temperature.
   The following table details the frost stop point on a correctly charged system running on the bench.

Table 5: Frost stop point

Ambient	50% charged	75% charged	100% charged
10°C	Cold with light sweat	Cold with light sweat	Frosting to compressor
20°C	Cold with light sweat	Sweating 50 mm from compressor	Frosting to compressor
30°C	Dry	Dry	Frosting 20 mm from compressor
40°C	Dry	Dry	Sweating 50 mm from compressor

7. If the suction pipe frosts to the appropriate frost stop point, the charge is likely to be correct. If the frost does not go back to the point shown there may be a capillary blockage or compressor fault.
8. If required, use the table below to determine whether the system is short of refrigerant or has a blocked capillary.

Table 6: System diagnosis

Diagnosis	Frost back (after 10 mins)
Blocked capillary	None
Normal operation	Refer to Table 5 above

9. After the fault has been diagnosed and repaired, reassemble the refrigeration system and test run.

Removing the Cartridge

Follow the steps below to remove the refrigeration cartridge from the cabinet. Ensure the cabinet is disconnected from the power supply before removing the cartridge.

Procedure 22: To remove the refrigeration cartridge

Before you start

If a customer reports a “not cooling” fault, and it has been established that the cabinet is not cooling, follow the “On-site Work Procedure” on page 36.

1. Disconnect the cabinet from the mains power supply (see page 14).
2. Unscrew and remove the kick panel.

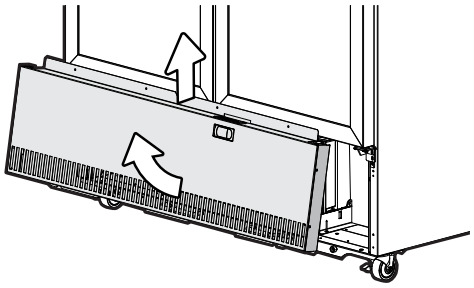

Procedure 22: To remove the refrigeration cartridge (continued)

3. Detach the electronic controller assembly from the kick panel.
4. Remove cartridge electrics cover and unplug the mains supply plug and cabinet plugs.
   Note: The cartridge and electronic controller plugs do not need to be unplugged.
5. Pull the two cartridge lifting levers forward to release them, and rotate outwards to lower the refrigeration cartridge.

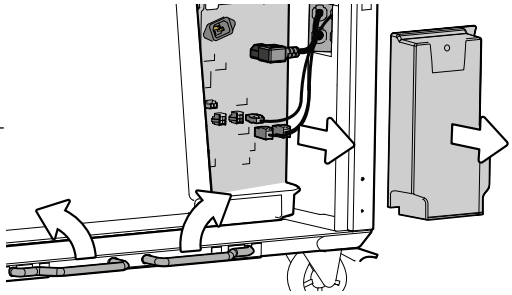

6. Pull the refrigeration cartridge from the cabinet. Take care of the cables when removing the cartridge.

Replacing the Cartridge

WARNING
The hydrocarbon cartridge must only be used on a hydrocarbon-compliant cabinet.

Procedure 23: To replace a cartridge

1. Disconnect the cabinet from the mains power supply (see page 14).
2. Remove the existing cartridge (see page 27).
3. Check that the gasket is in good condition.
4. Fit the new cartridge to the cabinet. Rotate the lifting levers inwards, and push them back to seal the cartridge to the cabinet.
5. Unscrew and remove the electrics cover from the front of the cartridge and connect up the power supply plug and cabinet plugs.
6. Refit the cartridge electrics cover.
7. Refit the electronic controller to the kick panel, and reconnect it.
8. Replace the kick panel.
9. Test and tag.
10. Reconnect the cabinet to the power and check for correct operation.

Cartridge Cover

Remove the cartridge cover to access parts within the cartridge assembly.

Procedure 24: To remove the refrigeration cartridge cover

1. Disconnect the cabinet from the power supply (see page 14).
2. Remove the refrigeration cartridge (see page 27).
3. Unscrew the four machine screws from the sides of the refrigeration cartridge and lift the cover off the cartridge.

Cartridge Electrics Box Assembly

The cartridge electrics box assembly contains the mains supply socket, EMI filter and panel mount socket connectors for the cartridge and cabinet. Refer to the “Wiring diagram” on page 30 or label on the electrics box cover for the socket connections.

Plugs may come loose as a result of movement and vibrations. When refitting, take care that all plugs are securely attached to the correct sockets.

Cartridge electrics box

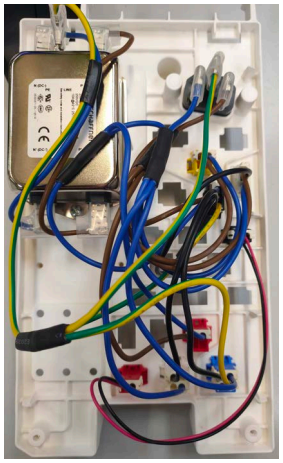

Inside the cartridge electrics box

Procedure 25: To remove and open the cartridge electrics box assembly

Before you start

If a customer reports a “not cooling” fault, and it has been established that the cabinet is not cooling, follow the “On-site Work Procedure” on page 36.

1. Disconnect the cabinet from the power supply (see page 14).
2. If required, unclip the electronic controller from the top of the electrics box.

Procedure 25: To remove and open the cartridge electrics box assembly (continued)

3. Undo the fixing screw at the top of the electrics box cover, and remove the cover.

4. Unplug all cartridge plugs from the cartridge electrics box.
5. Undo the two fixing screws at the base of the electrics box, and detach the electrics box from the cartridge.
6. To open the electrics box, undo the two fixing screws on the back of the electrics box and swing the back cover off.

Wiring diagram

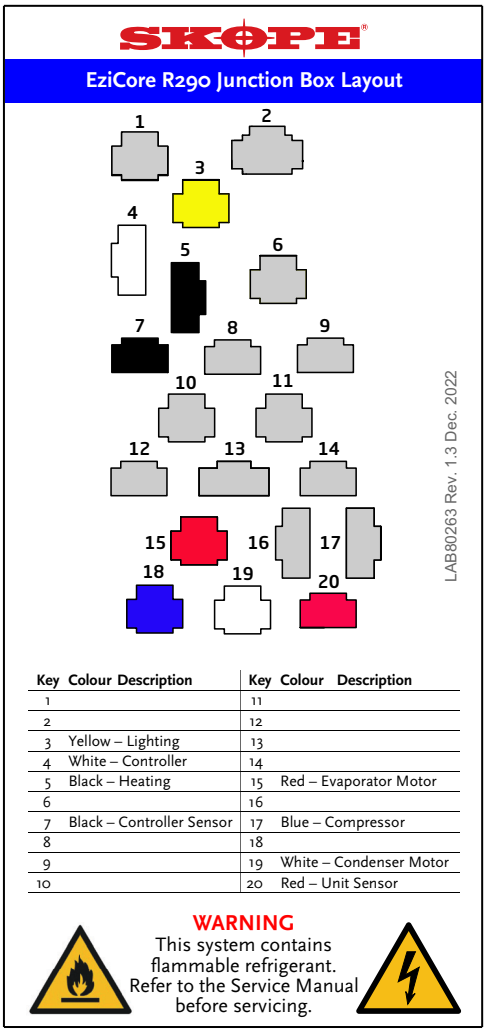

Key	Colour	Description	Key	Colour	Description
1			11		
2			12		
3	Yellow	Lighting	13		
4	White	Controller	14		
5	Black	Heating	15	Red	Evaporator Motor
6			16		
7	Black	Controller Sensor	17	Blue	Compressor
8			18		
9			19	White	Condenser Motor
10			20	Red	Unit Sensor

Condenser Fan

The condenser fan assembly is made up of a fan motor, fan blade and mounting brackets which can be replaced if necessary. The condenser fan flexible cord has a white plug.

If the fan stops for any reason, check all connections to ensure no plugs have come loose. Refer to the label on the electrics box cover to identify the condenser fan plug and socket in the electrics box.

IMPORTANT
Replace the motor with the same SKOPE OEM part.
DO NOT use alternative parts.

It is important that the fan blade and/or fan motor is replaced with the same part to ensure safety, correct alignment and refrigeration performance, and compliance. Tighten fan blades to the fan motor manufacturer recommended torque settings shown in Table 7 below.

Table 7: Fan motor manufacturer recommended torque settings

Fan motor manufacturer	Torque setting
Haier	1.5 Nm

Procedure 26: To access and remove the condenser fan assembly

Before you start
If a customer reports a “not cooling” fault, and it has been established that the cabinet is not cooling, follow the “On-site Work Procedure” on page 36.

1. Disconnect the cabinet from the power supply (see page 14).
2. Remove the refrigeration cartridge (see page 27).
3. Remove the cartridge cover (see page 29).
4. Unplug the condenser fan’s white 2-way connector, located near the compressor electrics.

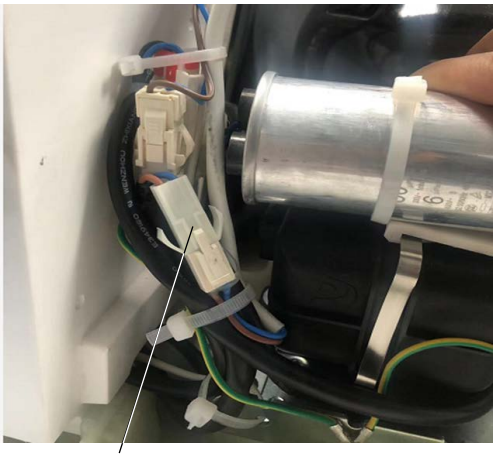

White 2-way connector

5. Free up the condenser fan motor cable and earth wire by:
   - releasing the eye terminal on the motor body.
   - cutting the cable ties holding the cables along the cartridge.

Eye terminal

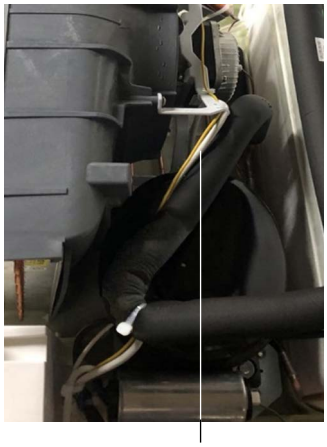

Fan motor cable and earth wire

6. Remove the fan assembly (fan motor, fan blade, mounting brackets) from the cartridge by lifting the shroud up and out.

Procedure 27: To replace the condenser fan blade

Before you start

If a customer reports a “not cooling” fault, and it has been established that the cabinet is not cooling, follow the “On-site Work Procedure” on page 36.

1. Disconnect the cabinet from the power supply (see page 14).
2. Remove the condenser fan assembly (see page 31).
3. Remove the screw and washer from the centre of the fan blade, and lift the blade from the motor.
4. Fit the new blade and fix with a 12 mm flat washer and serrated head screw. Tighten the blade to the fan motor manufacturer’s recommended torque setting (1.5 Nm).
5. Reassemble the cartridge and test for correct operation.

Procedure 28: To replace the condenser fan motor

Before you start

If a customer reports a “not cooling” fault, and it has been established that the cabinet is not cooling, follow the “On-site Work Procedure” on page 36.

1. Disconnect the cabinet from the power supply (see page 14).
2. Remove the condenser fan assembly (see Procedure 26 on page 31) and the fan blade (see Procedure 27 on page 32).
3. Detach the fan motor from the fan mounting bracket by removing the four screws from the mounting bracket.
4. Fit the new motor and reattach the fan blade with a 12 mm flat washer and serrated head screw. Tighten the blade to the fan motor manufacturer’s recommended torque setting (1.5 Nm).
5. Reassemble the cartridge, ensuring that:
   - all cables are neatly cable-tied away from the fan blade.
   - the eye terminal of the earth wire is fitted back on the body of the fan motor.
6. Test for correct operation.

Evaporator Fan

The evaporator fan assembly is made up of a fan motor and fan blade, both of which can be replaced when necessary. The evaporator fan flexible cord has a white 4-way plug near the compressor electrics.

If the fan stops for any reason, check all connections to ensure no plugs have come loose. Refer to the label on the electrics box cover to identify the evaporator fan plug and socket in the electrics box.

The fan motor and fan blade are fixed to the evaporator shroud via the brackets. The shroud (complete with fan motor and fan blade) can be lifted off the evaporator tub once the refrigeration cartridge cover has been removed.

IMPORTANT
Replace the motor with the same SKOPE OEM part.
DO NOT use alternative parts.

It is important that the evaporator fan blade and/or fan motor is replaced with the same part to ensure safety, correct alignment and refrigeration performance, and compliance. Tighten fan blades to the fan motor manufacturer recommended torque settings shown in Table 8 below.

Table 8: Fan motor manufacturer recommended torque settings

Fan motor manufacturer	Torque setting
Haier	1.5 Nm

Procedure 29: To access the evaporator fan assembly

Before you start

If a customer reports a “not cooling” fault, and it has been established that the cabinet is not cooling, follow the “On-site Work Procedure” on page 36.

1. Disconnect the cabinet from the power supply (see page 14).
2. Remove the refrigeration cartridge (see page 27).
3. Remove the cartridge cover (see page 29).
4. Free up the cables from the putty on the evaporator tub perimeter.
5. Cut the cable ties to release the control probe from the fan bracket.
6. Lift the evaporator fan assembly up and out of the evaporator box.

Procedure 30: To replace the evaporator fan blade

Before you start

If a customer reports a “not cooling” fault, and it has been established that the cabinet is not cooling, follow the “On-site Work Procedure” on page 36.

1. Disconnect the cabinet from the power supply (see page 14).
2. Remove the refrigeration cartridge (see page 27).
3. Gain access to the evaporator fan assembly (see page 33).
4. Remove the screw and washer from the centre of the fan blade, and lift the blade from the motor.
5. Fit the new blade, ensuring it is centred within the evaporator shroud. Tighten the blade to the fan motor manufacturer’s recommended torque setting (1.5 Nm).
6. Reassemble the cartridge and test for correct operation.

Procedure 31: To replace the evaporator fan motor

Before you start

If a customer reports a “not cooling” fault, and it has been established that the cabinet is not cooling, follow the “On-site Work Procedure” on page 36.

1. Access the evaporator fan assembly (see page 33) and remove the fan blade (see page 33).
2. Free the fan flexible cord by cutting the cable ties.

Procedure 31: To replace the evaporator fan motor (continued)

3. Trace the cable back to the connector (near the compressor electrics) and unplug it.

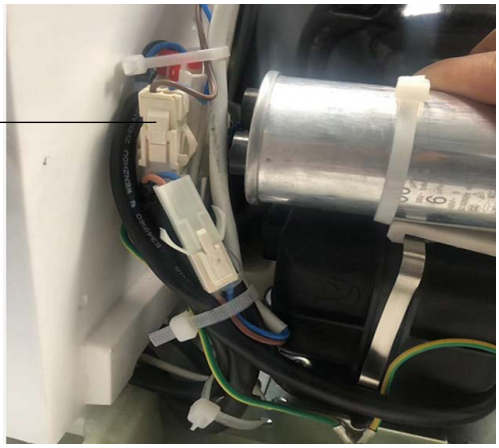

4. Detach the fan motor from the fan mounting bracket by removing the four screws from the mounting bracket.
5. Install the replacement motor.
   - Attach the screws to the replacement motor.
   - Ensure that the flexible cord points towards the bottom of the evaporator tub.
   - Attach the replacement motor to the mounting brackets.
6. Take care to re-cable tie the fan and control probe flexible cords back onto the mounting bracket to prevent high frequency vibration.
7. Fit the fan blade, ensuring it is centred within the evaporator shroud. Tighten the blade to the fan motor manufacturer's recommended torque setting (1.5 Nm).
8. Reassemble the cartridge and test for correct operation.

Compressor

The compressor is located at the front of the refrigeration cartridge, beside the condenser.

Before replacing the compressor

If the compressor is causing excessive noise, check the mountings to ensure there is no damage to the rubber or the washers, nuts and screws. A faulty compressor may have a distinct hissing sound and run with a very hot body temperature.

Check all plug connections and ensure the compressor electrics are operating correctly (see "Compressor Electrics" on page 35). The compressor must be supplied with consistent voltage

over 220 volts, so ensure the voltage does not drop at start-up. If the voltage does drop, ensure the cartridge has a direct power supply (not from a multi-box or extension cord).

IMPORTANT
To eliminate possible vibration noise, ensure no pipes touch the plastic base and condenser assembly.

Compressor Electrics

The compressor electrics are located on the front of the compressor.

Procedure 32: To access the compressor electrics

1. Disconnect the cabinet from the power supply (see page 14).
2. Remove the refrigeration cartridge (see page 27).
3. Remove the cartridge cover (see page 29)
4. Unclip the capacitor from the relay cover.
5. Unclip the relay cover from the compressor by releasing the metal clip and screw on the relay cover.

6. Make sure that all terminals in the relay cover are in their correct locations, and not loose or falling off.

On-site Work Procedure

If a customer reports a “not cooling” fault, and it has been established that the cabinet is not cooling, follow the procedure below when making the service visit.

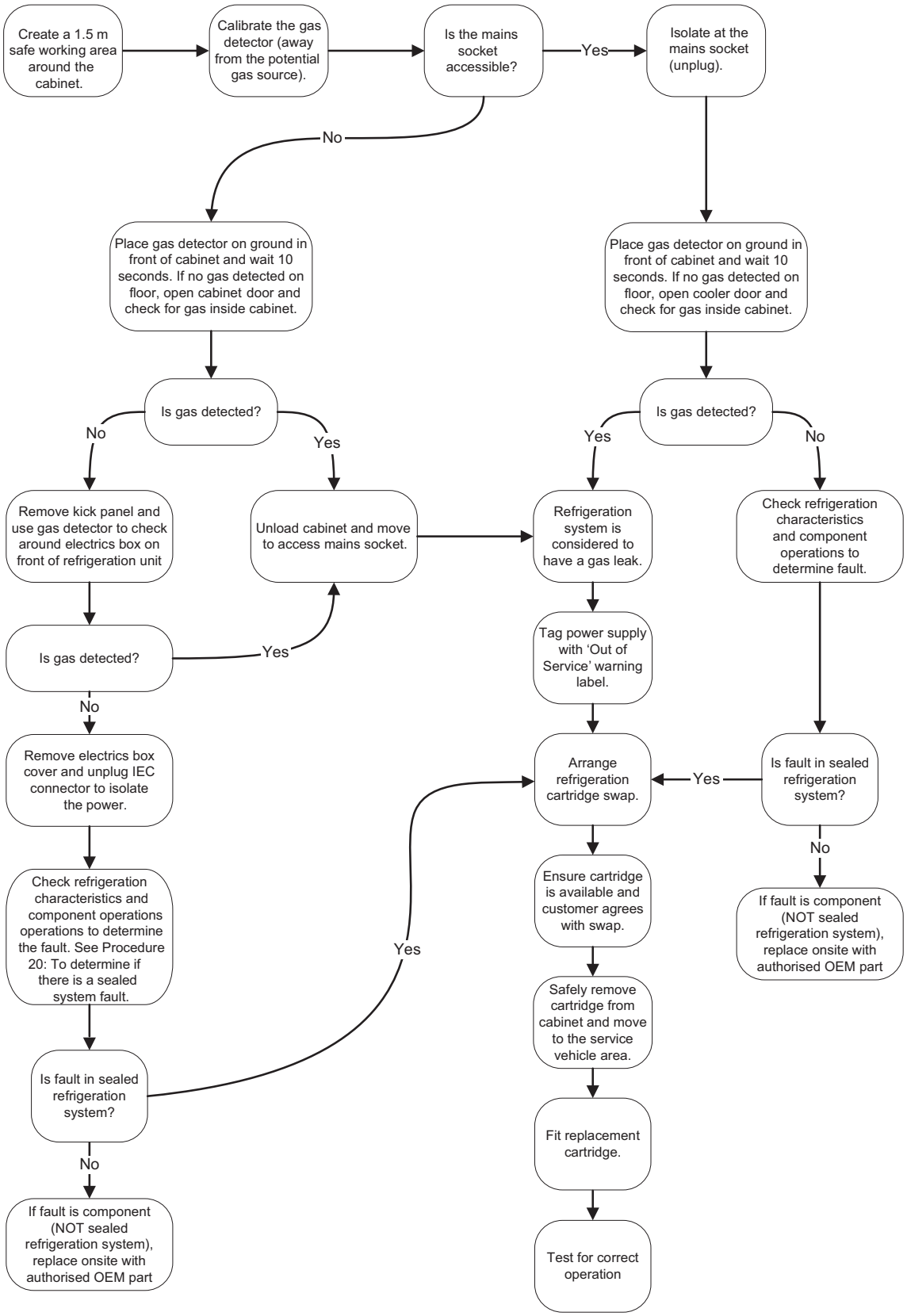

On-site work procedure (continued)

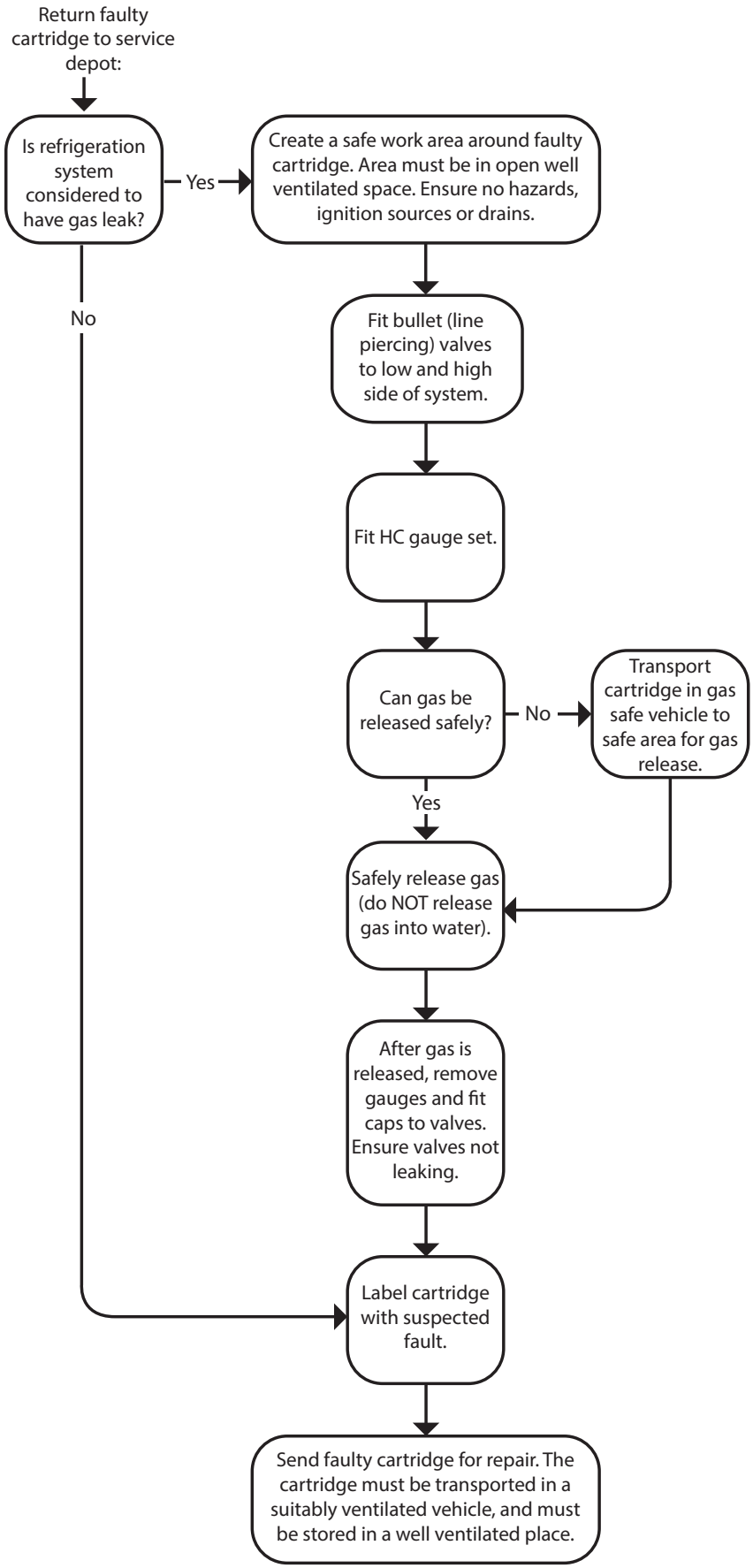

6 Spare Parts

Main Assembly

BCE600N

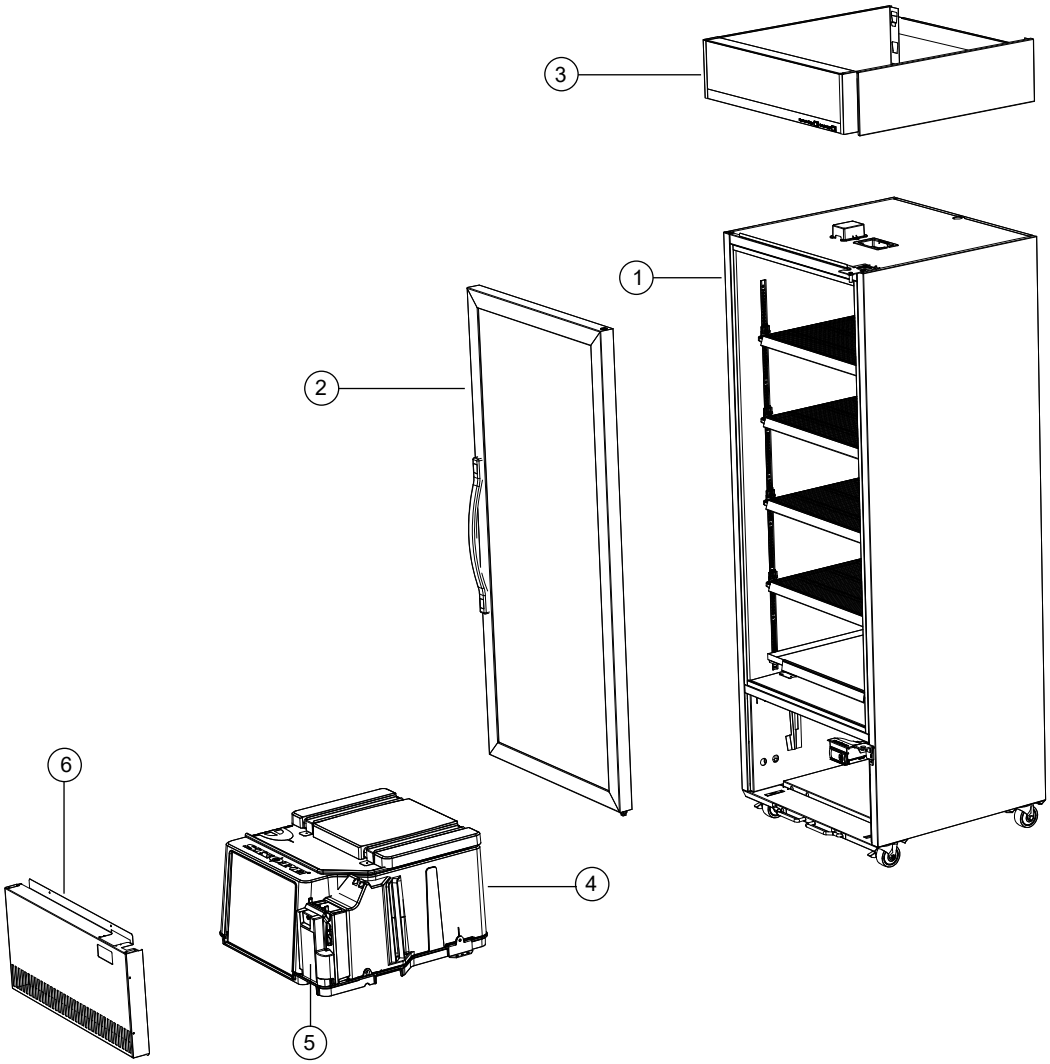

Table 9: Parts – Main assembly BCE600N

No.	Description	Page	Part number
1	Cabinet assembly	Page 40	
2	Door assembly	Page 42	
3	Sign assembly	Page 43	
4	Cartridge assembly	Page 44	UBHCNI-0061
5	Electrics box assembly	Page 46	HB0070843783
6	Kick panel	–	EB60BYN/130A-49

BCE1200N

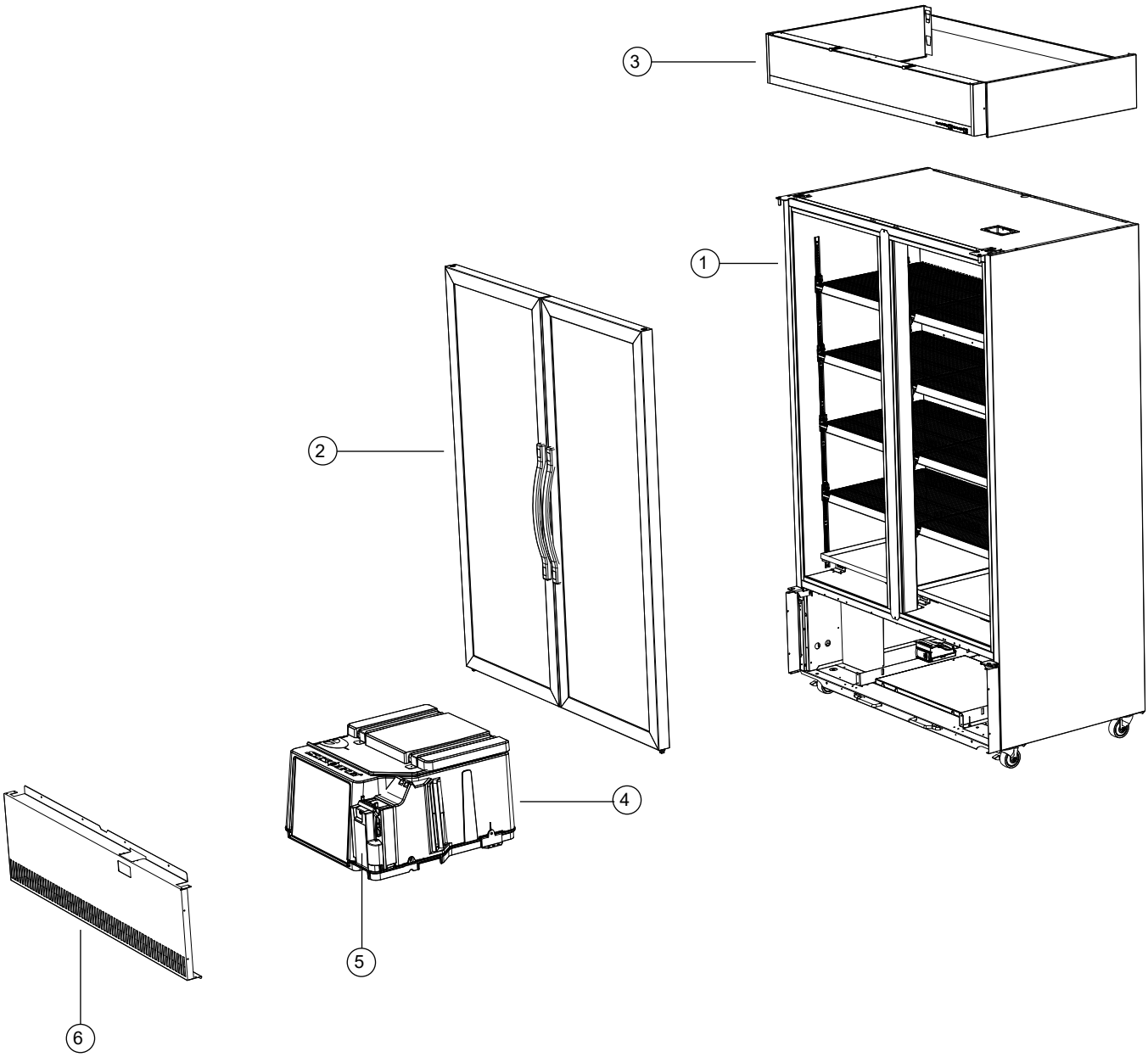

Table 10: Parts – Main assembly BCE1200N

No.	Description	Page	Part number
1	Cabinet assembly	Page 41	
2	Door assembly	Page 42	
3	Sign assembly	Page 43	
4	Cartridge assembly	Page 44	UBHCNI-0061
5	Electrics box assembly	Page 46	HB0070843783
6	Kick panel	–	EB12BYN/130A-49

Cabinet Assembly

BCE600N

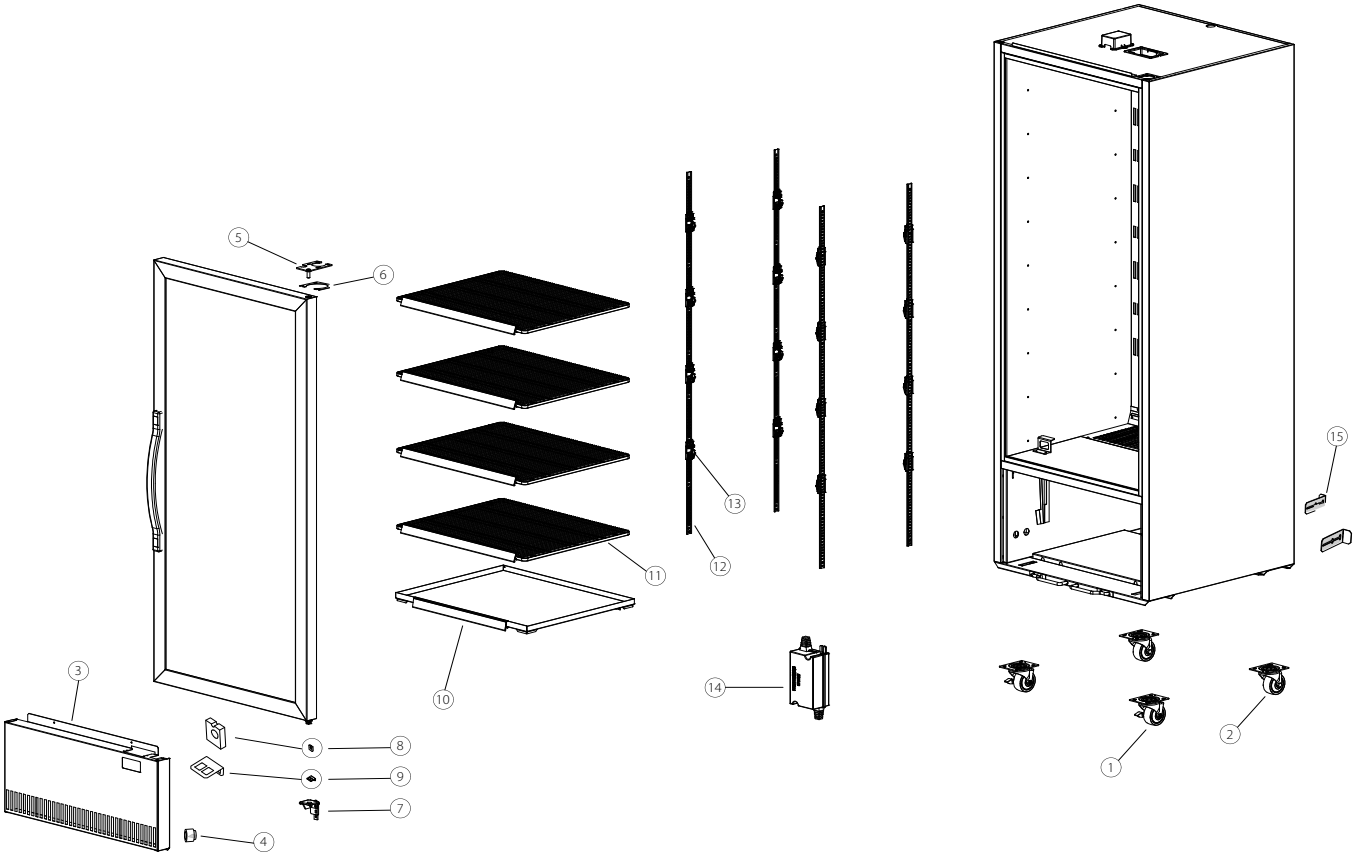

Table 11: Parts – Cabinet assembly BCE600N

Item	Description	SKOPE Part No.
1	Front castor – lockable	HB0070105065B
2	Rear swivel castor	HB0070105066
3	Kick panel	EB60BYN/130A-49
4	Kick panel stop	HB0070203535
5	Top hinge – right hand	HB0070110582
6	Top hinge spacer	B15RW/115
7	Bottom hinge – right hand	HB0070110578
8	Height adjustment block	HB0070110581
9	Tension bracket	HB0070110580
10	Bottom solid shelf	HB0070116430
11	Wire shelf	HB0070116491
12	Shelf support strip	HB0070113857H
13	Shelf clip and retention clip	HB0070209545E
14	Light power supply (LED driver)	HB0071800265
15	Cabinet rear stand-off	HB0070110666

BCE1200N

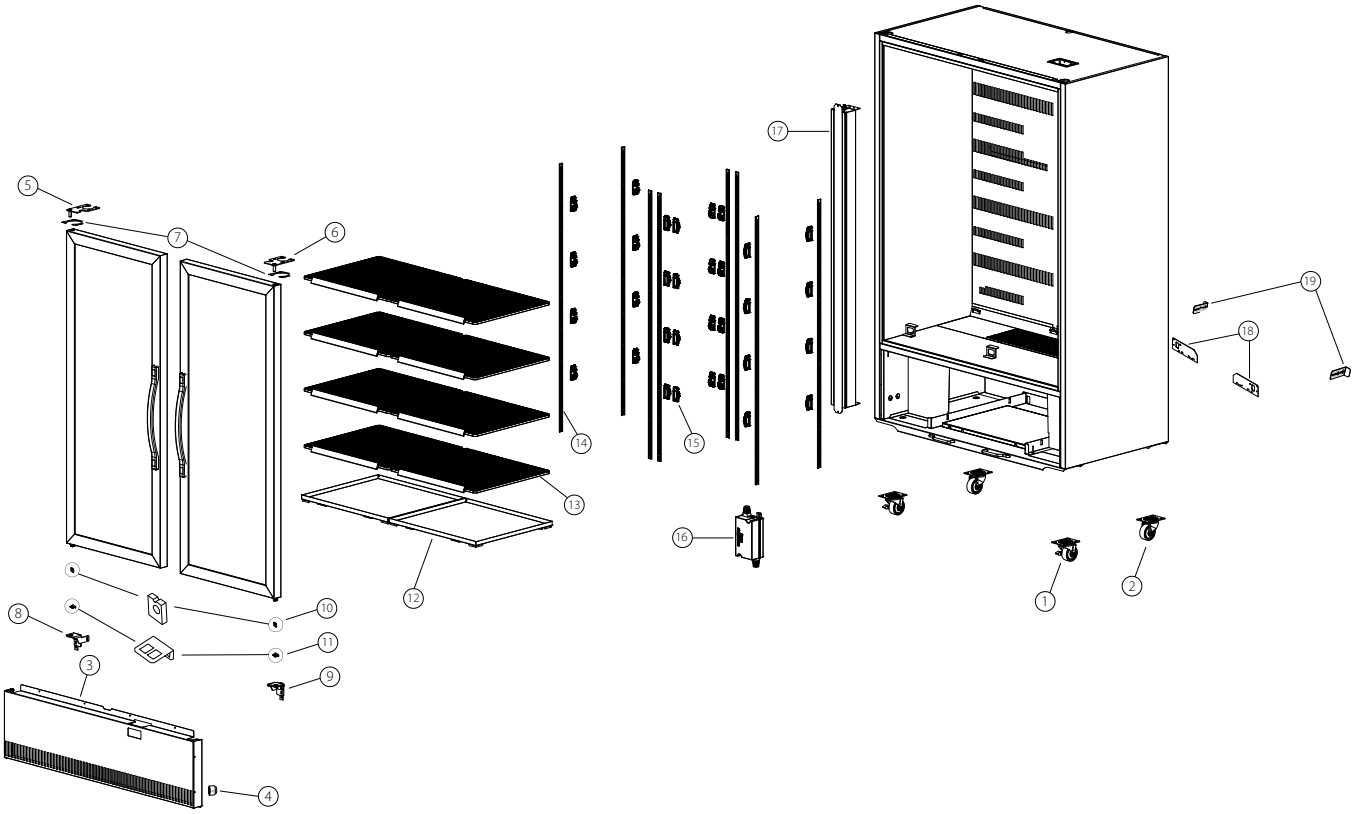

Table 12: Parts – Cabinet assembly BCE1200N

Item	Description	SKOPE Part No.
1	Front castor – lockable	HB0070105065B
2	Rear swivel castor	HB0070105066
3	Kick panel	EB12BYN/130A-49
4	Kick panel stop	HB0070203535
5	Top hinge – left hand	HB0070110583
6	Top hinge – right hand	HB0070110582
7	Top hinge spacer	B15RW/115
8	Bottom hinge – left hand	HB0070110579
9	Bottom hinge – right hand	HB0070110578
10	Height adjustment block	HB0070110581
11	Tension bracket	HB0070110580
12	Bottom solid shelf	HB0070116431
13	Wire shelf	HB0070116492
14	Shelf support strip	HB0070113857H
15	Shelf clip and retention clip	HB0070209545E
16	Light power supply (LED driver)	HB0071800265
17	Centre pillar assembly	HB0070843036
18	Cartridge rear stop	SM60BV/327
19	Cabinet rear stand-off	HB0070110666

Glass Door Assembly

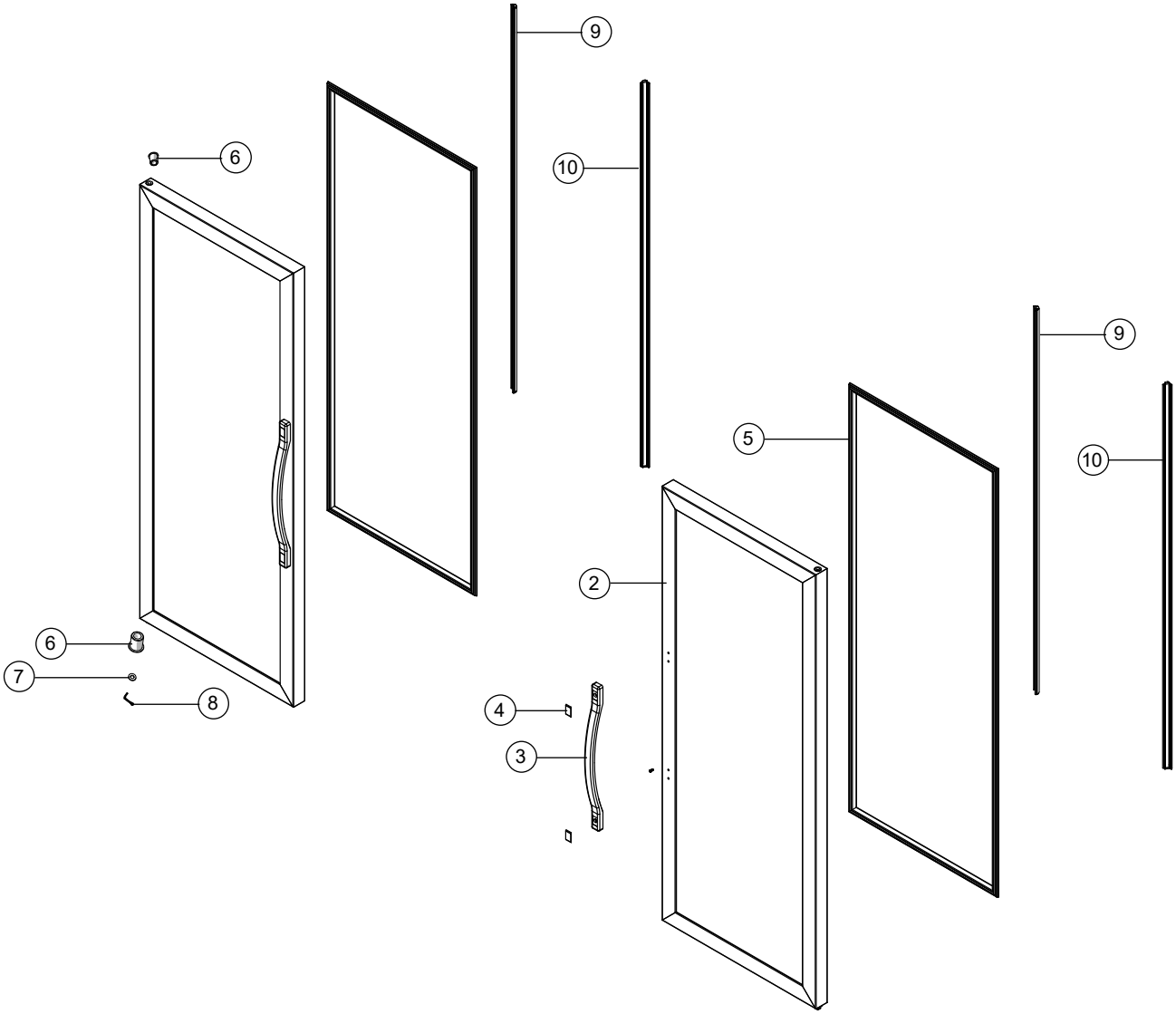

Table 13: Parts – Glass door assembly

No.	Description	SKOPE Part No.	
		BCE600N	*BCE1200N*
1	Left hand door assembly		HB0070843182
2	Right hand door assembly	HB0070843181	HB0070843183
3	Door handle	HB0070202818	HB0070202818
4	Door handle cap	HB0070202817	HB0070202817
5	Door gasket	HB0070204885	HB0070201462
6	Bush	PLM5075	PLM5075
7	Bush washer	PLM11298	PLM11298
8	Split pin	FAS5076	FAS5076
9	Door LED assembly – left hand	HB0074001528	HB0074001528
10	Door LED assembly – right hand	HB0074001529	HB0074001529

Sign Assembly

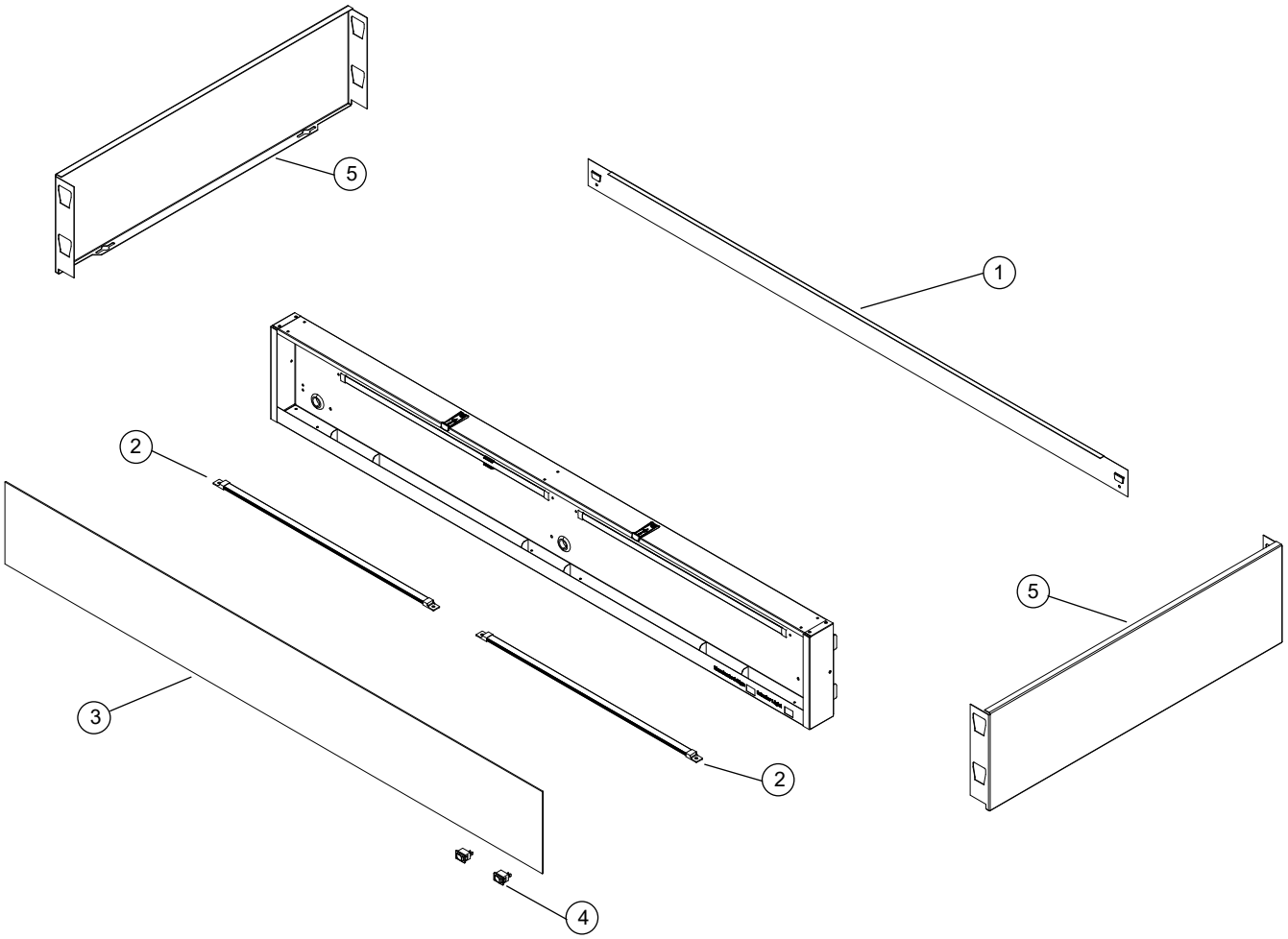

Table 14: Parts – Sign assembly

No.	Description	SKOPE Part No.	
		BCE600N	*BCE1200N*
1	Sign assembly	HB0070843781	HB0070843782
2	Sign back strip	HB0070105692Q	HB0070108524R
3	LED light strip	HB0074001541 (× 1)	HB0074001527A (left side) HB0074001527 (right side)
4	Opal light panel	HB0070212175	HB0070212176
5	Sign sides	SM12BV/S20-49	SM12BV/S20-49
6	1 × light switch	HB0074001365	HB0074001365
–	Sign lighting loom (not shown)	HB0070403065	HB0070403065
–	Cabinet lighting loom (not shown)	HB0070403058	HB0070403055

Cartridge Assembly – UBHCNI-0061

Ordering The model and serial number are both printed on the cartridge rating/serial number label attached to the front of the cartridge. Before ordering spare parts, take note of the model and serial numbers.

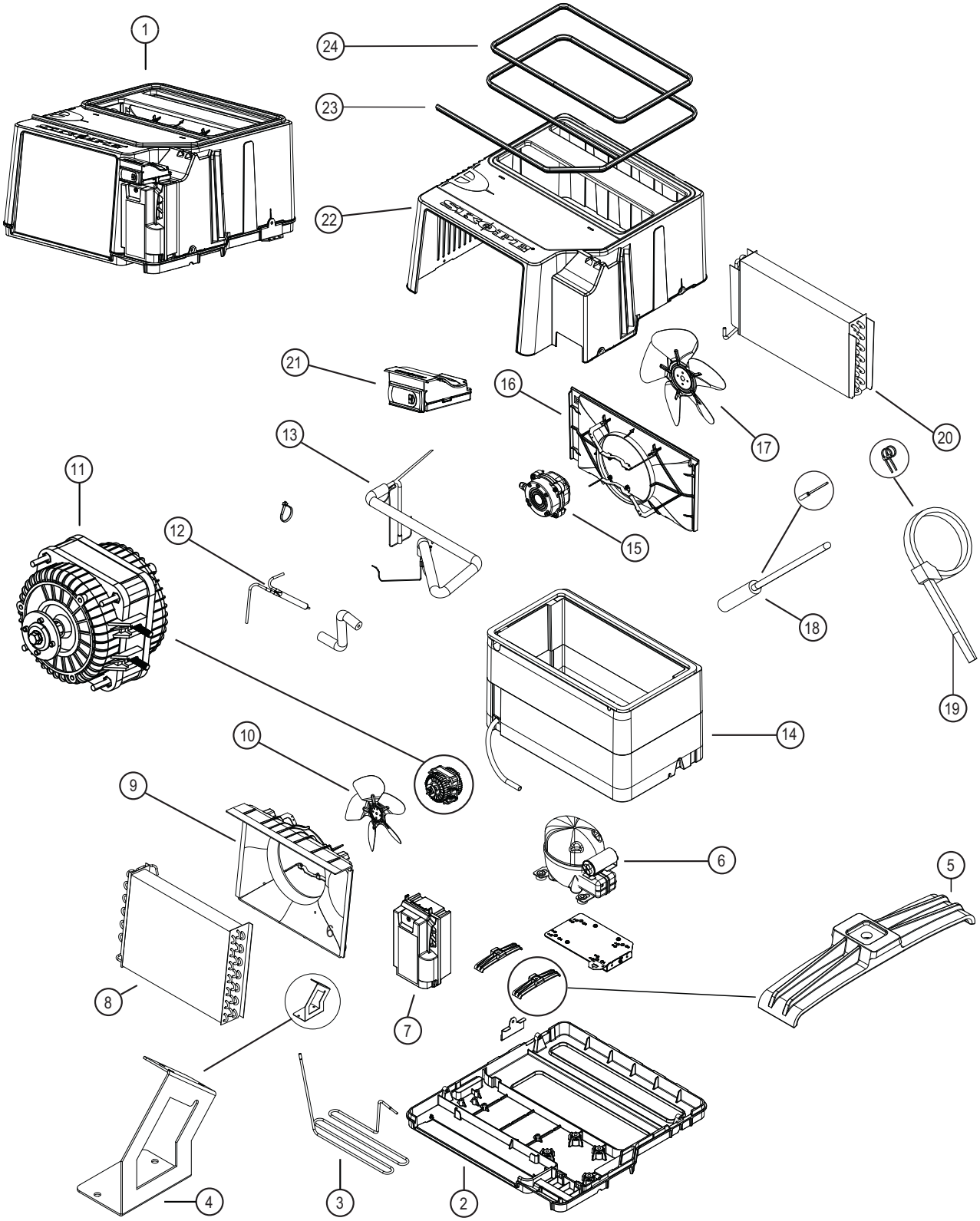

Table 15: Parts – Cartridge assembly

Item	Description	SKOPE Part No.
1	EziCore cartridge assembly	UBHCNI-0061
2	Cartridge plastic bottom	HB0070206212D
3	Condensate line	HB0070702717
4	Drier bracket	HB0070112920
5	Condensate pipe support	HB0070206128
6	Compressor – Donper L96CU1	HB0074001387A
7	Electrics box assembly (see page 46)	HB0070843783
8	Condenser coil	HB0070702972
9	Condenser fan shroud	HB0070206124
10	Condenser fan blade	HB0074000868
11	Condenser fan motor	HB0074000728B
12	Drier	HB0074180006
13	Suction line assembly	HB0070702718
14	Evaporator box	HB0070510928A
15	Evaporator fan motor	HB0074001315
16	Evaporator fan shroud	HB0070206123
17	Evaporator fan blade	HB0074001530
18	Temperature probe	HB0070400497
19	Cartridge cable clamp	HB0070206127
20	Evaporator coil	HB0070702968
21	Controller – Chunchang C212	HB0074001531
22	Cartridge plastic top cover	HB0070206133A
23	Cartridge gasket seal 2306 mm	PLE11052-2306
24	Cartridge gasket seal 1571 mm	PLE11052-1571
–	Mains power cord (not shown)	HB0070402658

Electrics Box Assembly

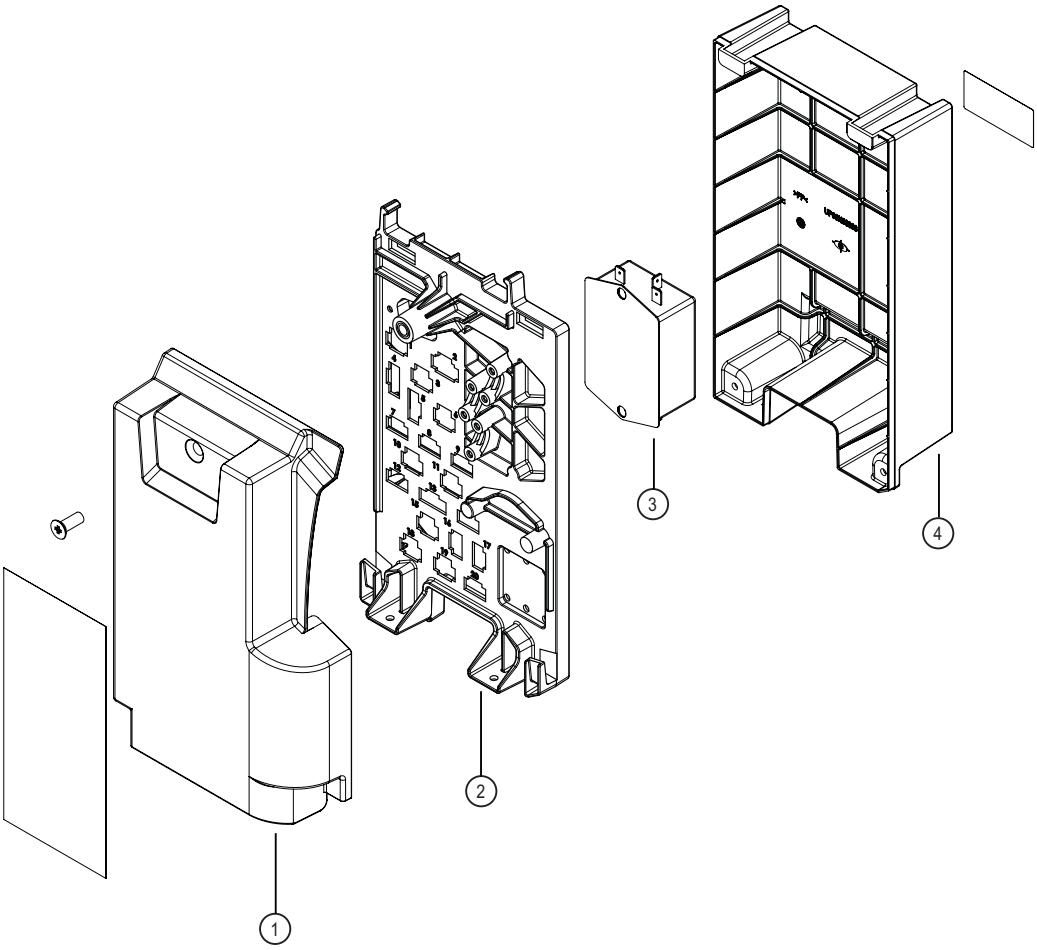

Table 16: Parts – Electrics box assembly

No.	Description	SKOPE Part No.
	Electrics box assembly	HB0070843783
1	Cartridge electrics box enclosure front	HB0070207012A
2	Electrical enclosure panel	HB0070207014
3	EMI filter	HB0074600001
4	Cartridge electrics box enclosure rear	HB0070207013A
–	Controller to electrics box wire looms (not shown)	HB0070403052

7 Maintenance

Cleaning

Before any maintenance, unplug the cabinet from the mains power supply.

Cabinet

The owner should periodically wipe the inside and outside of the cabinet with a damp cloth, taking care to keep moisture away from electrical parts.

Condenser Coil

To ensure trouble-free performance, SKOPE strongly recommends the cleaning schedule in Table 17, which will depend on:

- the cabinet's location and environment.
- the condition of the condenser coil.

Table 17: Cleaning schedule

Timeframe	Performed by	Action
At least once a month	Owner	**Condenser coil** Brush with a soft brush to remove dust and fluff. If debris can no longer be removed, arrange a service call for comprehensive maintenance and coil clean.
Every 6 months, or as required	Service technician	**Condenser coil** Comprehensive maintenance based on the condition of the coil, which may include: • a nitrogen blow-out. • a PH-neutral chemical clean.

The condenser coil **must** be kept clean for efficient and reliable operation.

WARNING
Unplug the cabinet from the mains power supply before cleaning the condenser coil.

Procedure 33: To clean the condenser coil

1. Disconnect the cabinet from the mains power supply (see page 14).

2. Remove the kick panel from the front of the cabinet.

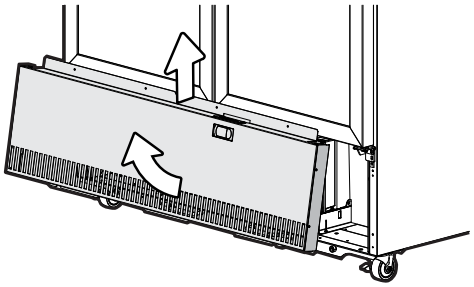

3. Check the condition of the condenser coil, and use an appropriate cleaning method:
   - a nitrogen blow-out.
   - a PH-neutral chemical clean.

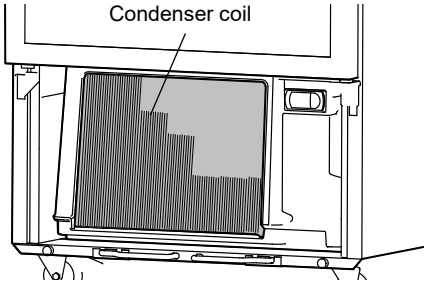

4. Refit the kick panel, and reconnect to the power supply.

8 Troubleshooting

Electronic Controller

Alarms signal unexpected operational changes in the cabinet. When an alarm is activated, use the electronic controller app to help diagnose the problem, and service as necessary.

Cabinet and Refrigeration Cartridge

For problems with the cabinet and refrigeration cartridge use Table 18.

Table 18: Cabinet and cartridge troubleshooting

Problem	Possible cause	Recommended action
• Cabinet not operating • No controller display	• Loss of power supply • Loose plug	• Check the mains power supply. • Check that all plugs are connected correctly.
• Cabinet not operating as usual • Defrost cycle incorrect length	• Incorrect parameters	Check each parameter individually. Get the latest parameter set by registering for and logging into the skope.com website, or contacting Customer Service.
• Fan not working	• Loose plug	Check all plugs are connected correctly.
• Lights not on	• Electronic controller is in Night mode • Light switched off • Failed LED light • Refrigeration system error (indicated by the electronic controller) • Plug not connected properly • Power supply fault	• Switch the light on while keeping the cabinet in Night mode by pressing the light button on the electronic controller faceplate. • Change the cabinet into Day mode by pressing and holding the light button on the electronic controller faceplate, or holding the door open for 10 seconds. • Switch the light on via the independent light switch. • Replace the light. • Diagnose and repair. If a system fault is found contact SKOPE for information on how to proceed. • Check and clean the plugs. • Replace the light's power supply.
• Light component not working	• Plug not connected properly • Faulty light	• Check and clean the plug connection. • Replace the light.
• Segment of light not working	• Faulty light	Replace the light.
• Excess noise vibration	• Refrigeration pipes transferring vibration into the cartridge	Re-align the pipes to ensure they are not touching the evaporator tub bottom surface, evaporator tub support legs, plastic base, or condenser coil assembly.
• Excess compressor noise	• Noise variation is usual as the variable speed compressor speed changes	
	• Damaged mountings	Check the mountings to ensure there is no damage to the rubber, or the washers, nuts or screws.
• Compressor not operating	• Compressor electrics	• Check all plug connections and ensure that the compressor electrics are operating correctly. • Make sure the compressor is supplied with consistent voltage over 220 volts. • Ensure the voltage does not drop at start-up. If the voltage does drop, ensure the cartridge has a direct power supply (not from a multi-box or extension cord).
	• Failed compressor	Replace the compressor.

Table 18: Cabinet and cartridge troubleshooting (continued)

Problem	Possible cause	Recommended action
• Frozen evaporator coil	• Setpoint is too cold	Check and raise the setpoint.
	• Electronic controller fault	Replace the controller.
	• Short of refrigerant	Perform refrigeration system diagnostics and service as required.
• Ice build-up inside the evaporator tub	• Leaking cartridge seal	Check that the evaporator tub seals are fully clamped, and the cabinet top seal is good without gaps. Micro-gaps will allow ice build-up in the cabinet.
• Power consumption is higher than expected	• Cabinet door is opened too often	Ensure the door is closed more often.
	• Cartridge is operating too hot	• Clean the condenser. • Ensure the cabinet has good ventilation around the refrigeration cartridge. • Ensure the cabinet is within the maximum operating temperature.
	• Product is too cold	Raise the setpoint.
• Product is too warm	• Door not closing properly	• Check and clean the door gasket. • Ensure the cabinet is on a level surface.
	• Excessive door opening	Limit door openings.
	• Electronic controller is in Night mode	Change the cabinet into Day mode by pressing and holding the light button on the electronic controller faceplate, or holding the door open for ten seconds.
	• Cartridge is operating too hot • Excessive refrigeration heat load	• Ensure the cabinet has good ventilation around the refrigeration cartridge. • Ensure the cabinet is within the maximum operating conditions.
	• Setpoint is too high	Lower the setpoint.
	• The cabinet is recently loaded	Allow the product time to cool down.
	• The cabinet is overstocked	• Remove some product. • Product must not overhang the shelves.
	• Refrigeration system error (indicated by the electronic controller)	Diagnose and repair. If a system fault is found contact SKOPE for information on how to proceed.
• Moisture build up on cabinet exterior	• Frequent door opening	Limit door openings.
	• Door not closing properly	• Check and clean the door gasket. • Ensure the cabinet is on a level surface.
	• High humidity	Check the ambient operating temperature and reposition the cabinet if necessary.
• Cabinet door does not close properly	• Cabinet is on an uneven surface	Level the cabinet.
	• Door is obstructed	Check the shelves and product.
	• Door gasket is dirty	Check and clean the door gasket.
• Warm cabinet temperatures • Compressor operating for long periods (more than 1 hour)	• Blocked condenser coil	Clean the condenser coil.
	• Poor ventilation around the refrigeration cartridge	• Ensure the cabinet has good ventilation around the refrigeration cartridge. • Ensure the cabinet is within the maximum operating temperature.

SKOPE Contacts

SKOPE Industries Limited

ABN: 73 374 418 306
AU: 1800 121 535
NZ: 0800 947 5673
skope@skope.com
www.skope.com